SHEET LAYOUT AND SIDE UP

Install sheets across the floor joists with the short sheet edges fully supported on joists in a staggered pattern. For internal tiled applications, install sheet with label 'This side DOWN for TILES' facing down. For internal vinyl/carpet applications, install sheet with label 'This side UP for VINYL' facing up.

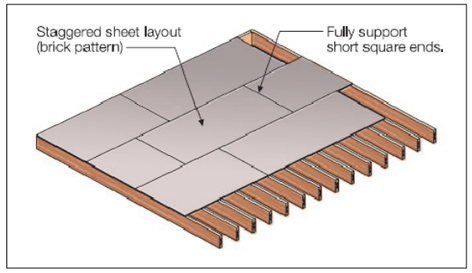

FIGURE 1 SHEET LAYOUT - TILING AND VINYL

INSTALLATION STEPS

NOTES

1. Ensure the product meets aesthetic and product size specifications before installation. James Hardie will not be responsible for rectifying aesthetic surface variations following installation.
2. The sheet is multi purpose and depending on the finish, the short sheet ends may or may not need a gap. As a result, creep at the short sheet ends will occur and over many sheets additional floor joists may be required.

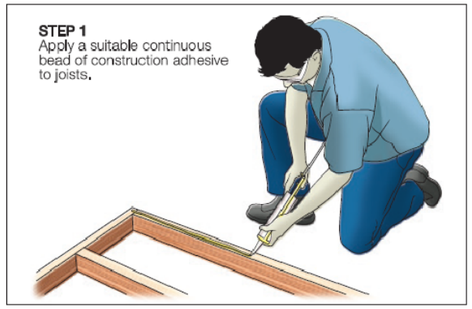

FIGURE 2 CONSTRUCTION ADHESIVE

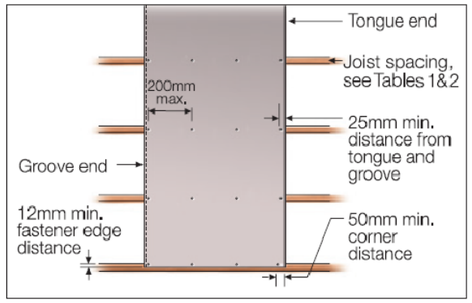

FIGURE 3 FASTENER LAYOUT

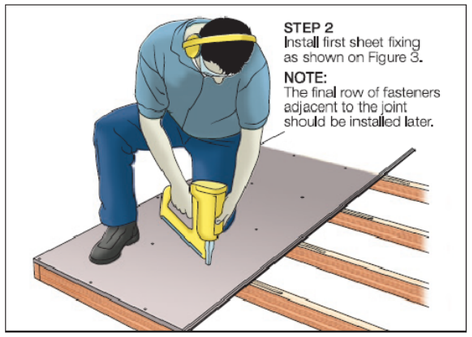

FIGURE 4 FIXING 1ST PANEL

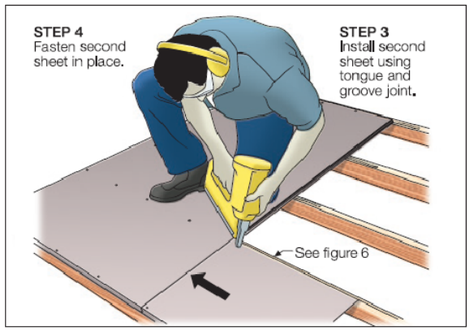

FIGURE 5 FIXING 2ND PANEL

FOR INTERNAL DRY AREAS

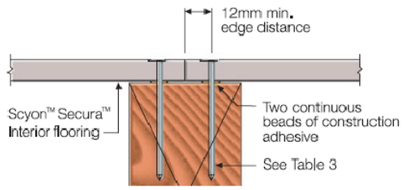

For Internal Dry Area butt joints - Tile and Vinyl

FOR INTERNAL TILED WET AREAS ONLY

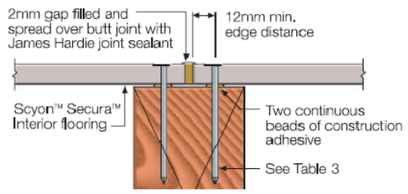

For Internal Wet Area butt joints - Tiled

FIGURE 6 BUTT JOINING OPTIONS

DIMENSIONS IN MILLIMETRES

ITEM	DRAWING No	DESCRIPTION	QTY.	MASS (kg)
1	3947-40-25	19 THK SCYON SECURA FLOOR SHEET 4	1	34.2
2	3947-40-20	19 THK SCYON SECURA FLOOR SHEET 3	1	34.3
3	3956-40-15	19 THK SCYON SECURA FLOOR SHEET 2	1	34.3
4	3956-40-10	19 THK SCYON SECURA FLOOR SHEET 1	1	34.2
5	3956-40-35	19 THK SCYON SECURA FLOOR PIECE 1	4	1.0
6	3956-40-40	19 THK SCYON SECURA FLOOR PIECE 2	2	0.8
7	10G-16x45-WING-DRILL	10G-16x45 WING DRILLING SCREW	96	

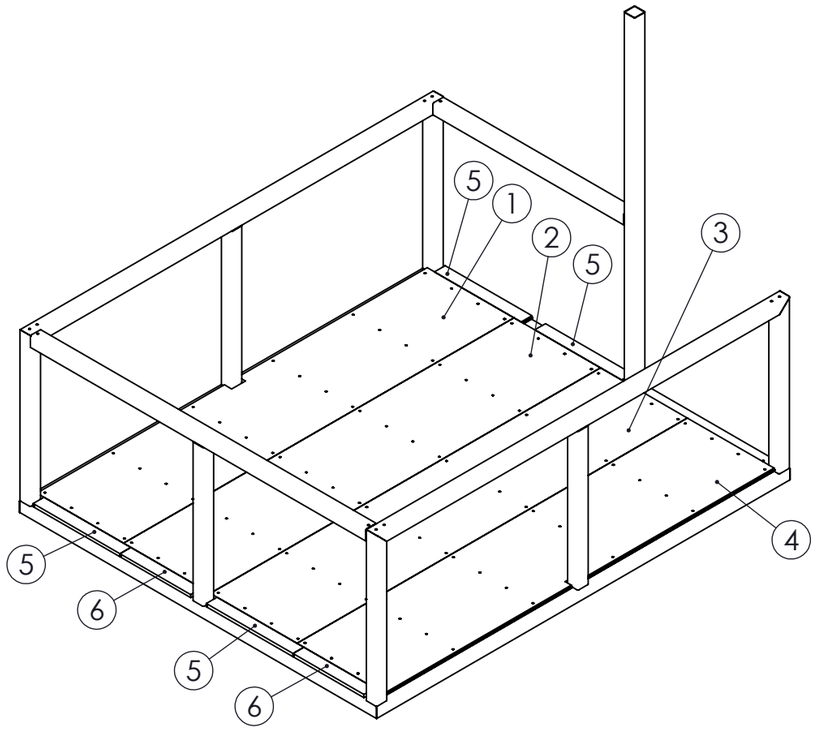

19 THK SCYON SECURA CABIN FLOORING WEIGHT - 154.0 kg

UNLESS OTHERWISE SPECIFIED: TOLERANCES: MACHINE + / - 0.25mm FABRICATION + / - 1.0 mm

DIMENSIONS IN MILLIMETRES

THIS DRAWING IS THE PROPERTY OF MECHANICAL ENGINEERING & CAD SERVICES (MECS) Pty Ltd & MUST NOT BE MANUFACTURED FROM,COPIED OR TRANSMITTED TO A THIRD PARTY WITHOUT THE PRIOR APPROVAL FROM MECHANICAL ENGINEERING & CAD SERVICES (MECS) Pty Ltd

MECS
Mechanical Engineering & CAD Services
11 Campbell Place WAGGA NSW 2650
Ph: - 0409 985 816
Email: nick@mecservices.com.au

THIRD ANGLE PROJECTION

CLIENT

RODDY ENGINEERING
14 Waratah St TUMUT NSW 2720
Ph: - 02 6947 4039
Email: roddyeng.com.au

TITLE: 19 THK SCYON SECURA CABIN FLOORING

DWG NO. 3956-40 REV A3

DRAWN N DE BRUYN DATE 18/07/2025 SCALE:1:50 SHEET 1 OF 1