ITEM NO.	DESCRIPTION	LENGTH	MATERIAL	MASS (kg)
1	50.0x25.0x1.60 UA	2710	6060-T5	0.9
2	50.0x25.0x1.60 UA	2320	6060	0.7
3	50.0x25.0x1.60 UA	1420	6060-T5	0.4
4	50.0x25.0x1.60 UA	120.4	6060-T5	0.0
5	50.0x25.0x1.60 UA	40	6060	0.0
6	50.0x25.0x1.60 UA	40	6060	0.0

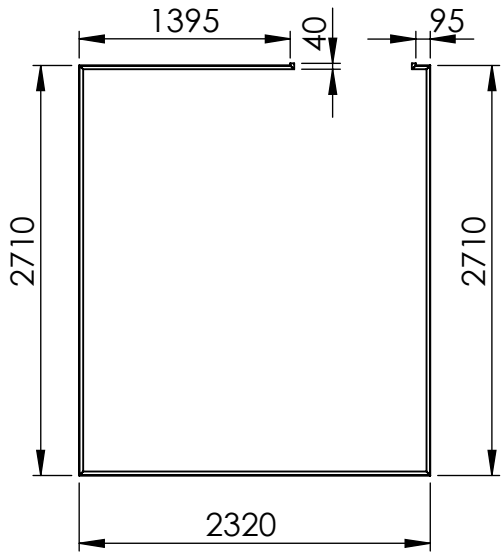

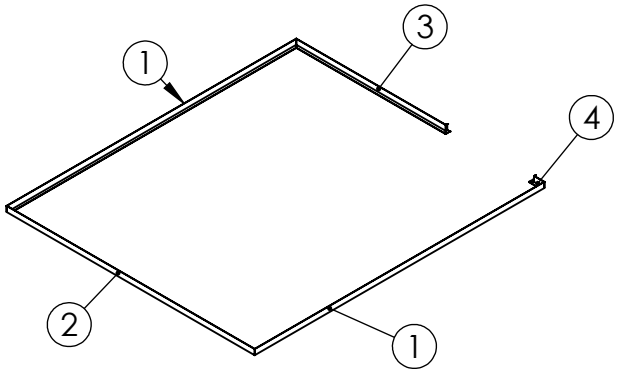

FINISH - POWDER COAT
COLOUR - SURF MIST

MATERIAL:- Extruded Aluminum

UNLESS OTHERWISE SPECIFIED: TOLERANCES: MACHINE + / - 0.25mm FABRICATION + / - 1.0 mm

DIMENSIONS IN MILLIMETRES

THIS DRAWING IS THE PROPERTY OF MECHANICAL ENGINEERING & CAD SERVICES (MECS) Pty Ltd & MUST NOT BE MANUFACTURED FROM,COPIED OR TRANSMITTED TO A THIRD PARTY WITHOUT THE PRIOR APPROVAL FROM MECHANICAL ENGINEERING & CAD SERVICES (MECS) Pty Ltd

MECS
Mechanical Engineering & CAD Services
11 Campbell Place WAGGA NSW 2650
Ph: - 0409 985 816
Email: nick@mecservices.com.au

THIRD ANGLE PROJECTION

WEIGHT: 2.9 kg

CLIENT

RODDY ENGINEERING
14 Waratah St TUMUT NSW 2720
Ph: - 02 6947 4039
Email: roddyeng.com.au

TITLE:

50x25x1.6 UA FLOOR COPPING

DWG NO. 3956-50-30

A4

DRAWN N DE BRUYN DATE 1/09/2025 SCALE:1:50 SHEET 1 OF 1