ITEM NO.	DESCRIPTION	LENGTH	QTY	MATERIAL	MASS (kg)
1	20 x 40 x 1.6 x T Bar EXT 2045	1471.2	1	6060-T5	0.37
2	20 x 40 x 1.6 x T Bar EXT 2045	187.4	1	6060-T5	0.04
3	20 x 40 x 1.6 x T Bar EXT 2045	1471.2	1	6060-T5	0.37

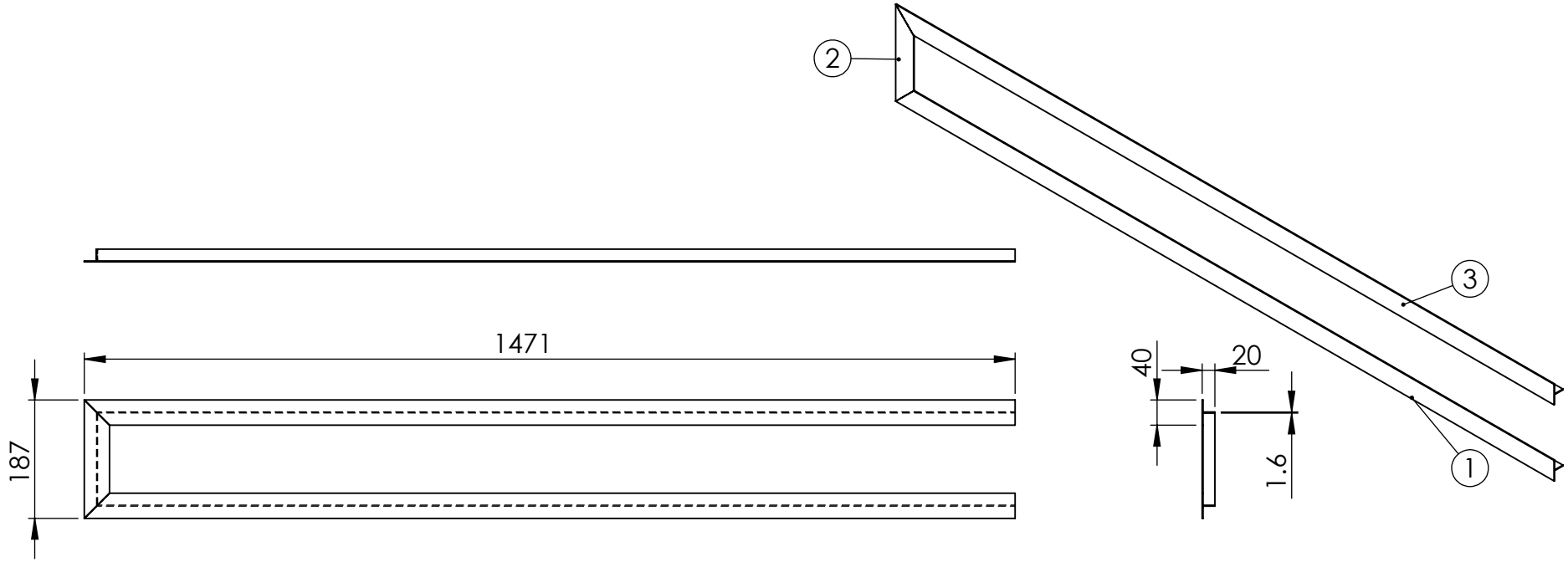

FINISH - POWDER COAT
COLOUR - SURF MIST

MATERIAL:- Extruded Aluminum

UNLESS OTHERWISE SPECIFIED: TOLERANCES: MACHINE + / - 0.25mm FABRICATION + / - 1.0 mm

DIMENSIONS IN MILLIMETRES

THIS DRAWING IS THE PROPERTY OF MECHANICAL ENGINEERING & CAD SERVICES (MECS) Pty Ltd & MUST NOT BE MANUFACTURED FROM,COPIED OR TRANSMITTED TO A THIRD PARTY WITHOUT THE PRIOR APPROVAL FROM MECHANICAL ENGINEERING & CAD SERVICES (MECS) Pty Ltd

MECS
Mechanical Engineering & CAD Services
11 Campbell Place WAGGA NSW 2650
Ph: - 0409 985 816
Email: nick@mecservices.com.au

THIRD ANGLE PROJECTION

WEIGHT: 0.77 kg

CLIENT

RODDY ENGINEERING
14 Waratah St TUMUT NSW 2720
Ph: - 02 6947 4039
Email: roddyeng.com.au

TITLE: 40x20x1.6 T BAR INTERNAL WALL FLASHING

DWG NO. 3956-50-37

A4

DRAWN N DE BRUYN DATE 2/09/2025 SCALE:1:10 SHEET 1 OF 1