| ITEM NO. | Description | LENGTH | MATERIAL | MASS (kg) |
|---|---|---|---|---|
| 1 | XFLAM FLAT PROFILE PANEL 75 Thk | 1115 | XFLAM | 19.97 |

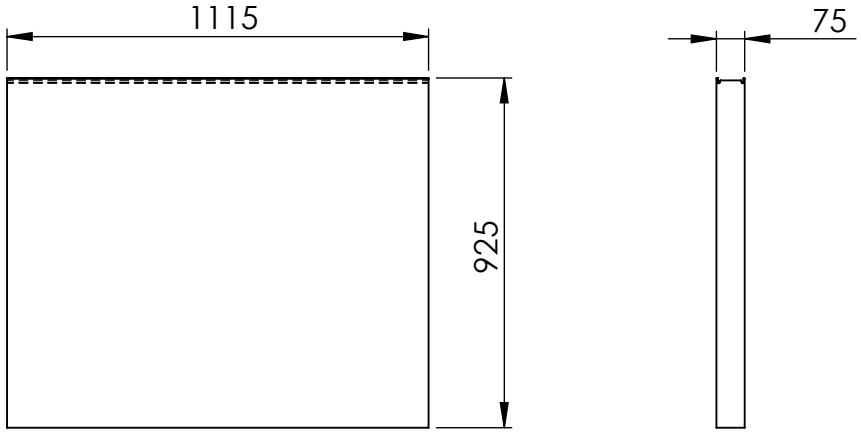


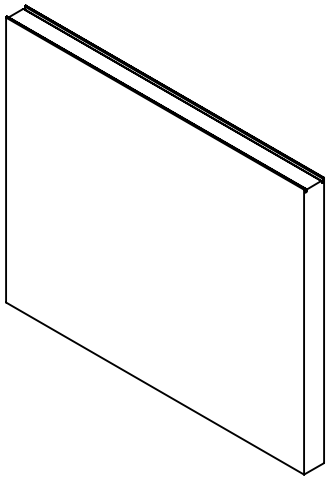

**MATERIAL:-** XFLAM

UNLESS OTHERWISE SPECIFIED: TOLERANCES: MACHINE + / - 0.25mm FABRICATION + / - 1.0 mm

DIMENSIONS IN MILLIMETRES

THIS DRAWING IS THE PROPERTY OF MECHANICAL ENGINEERING & CAD SERVICES (MECS) Pty Ltd & MUST NOT BE MANUFACTURED FROM,COPIED OR TRANSMITTED TO A THIRD PARTY WITHOUT THE PRIOR APPROVAL FROM MECHANICAL ENGINEERING & CAD SERVICES (MECS) Pty Ltd

MECS
Mechanical Engineering & CAD Services
11 Campbell Place WAGGA NSW 2650
Ph: - 0409 985 816
Email: nick@mecservices.com.au

THIRD ANGLE PROJECTION

WEIGHT: 19.97 kg

CLIENT

RODDY ENGINEERING

14 Waratah St TUMUT NSW 2720
Ph: - 02 6947 4039
Email: roddyeng.com.au

TITLE: XFLAM FLAT PANEL

DWG NO. 3956-50-45

A4

DRAWN N DE BRUYN DATE 25/07/2025 SCALE:1:20 SHEET 1 OF 1