ITEM	DRAWING No	DESCRIPTION	QTY.	MASS (kg)
1	3956-50-44	50x25x1.6 UA CORNER CORNICE	1	0
2	3956-50-42	25x25x1.6 EA CORNER CORNICE	2	0
3	3956-50-41	40x20x1.6 T BAR INTERNAL WALL FLASHING	1	1
4	3956-50-40	40x20x1.6 T BAR INTERNAL WALL FLASHING	1	1
5	3956-50-39	40x20x1.6 T BAR INTERNAL WALL FLASHING	1	1
6	3956-50-38	40x20x1.6 T BAR INTERNAL WALL FLASHING	1	1
7	3956-50-35	25x25x1.6 EA CORNER CORNICE	3	0
8	3956-50-33	40x20x1.6 T BAR INTERNAL WALL FLASHING	2	1
9	3956-50-32	40x20x1.6 T BAR INTERNAL WALL FLASHING	1	1
10	3956-50-46	40 x 20 x 1.6 T BAR INTERNAL WALL FLASHING	1	0
11	3956-50-30	50x25x1.6 UA FLOOR COPPING	1	3
12	3956-50-16	XFLAM FLAT PANEL	2	12
13	3956-50-15	XFLAM FLAT PANEL	2	7
14	3956-50-14	XFLAM FLAT PANEL	2	12
15	3956-50-13	XFLAM FLAT PANEL	2	4
16	3956-50-45	XFLAM FLAT PANEL	2	20
17	3956-50-10	XFLAM FLAT PANEL	1	23
18	3956-50-11	XFLAM FLAT PANEL	4	23
19	3947-50-31	40 x 20 x 1.6 T BAR INTERNAL WALL FLASHING	2	1
20	3956-50-47	40x20x1.6 T BAR INTERNAL WALL FLASHING	1	0
21	3956-50-36	40x20x1.6 T BAR INTERNAL WALL FLASHING	2	1
22	3956-50-37	40x20x1.6 T BAR INTERNAL WALL FLASHING	2	1
23	3956-50-43	25x25x1.6 EA CORNER CORNICE	2	0
24	3956-50-48	WHITE CHIPBOARD SHELVE	1	4

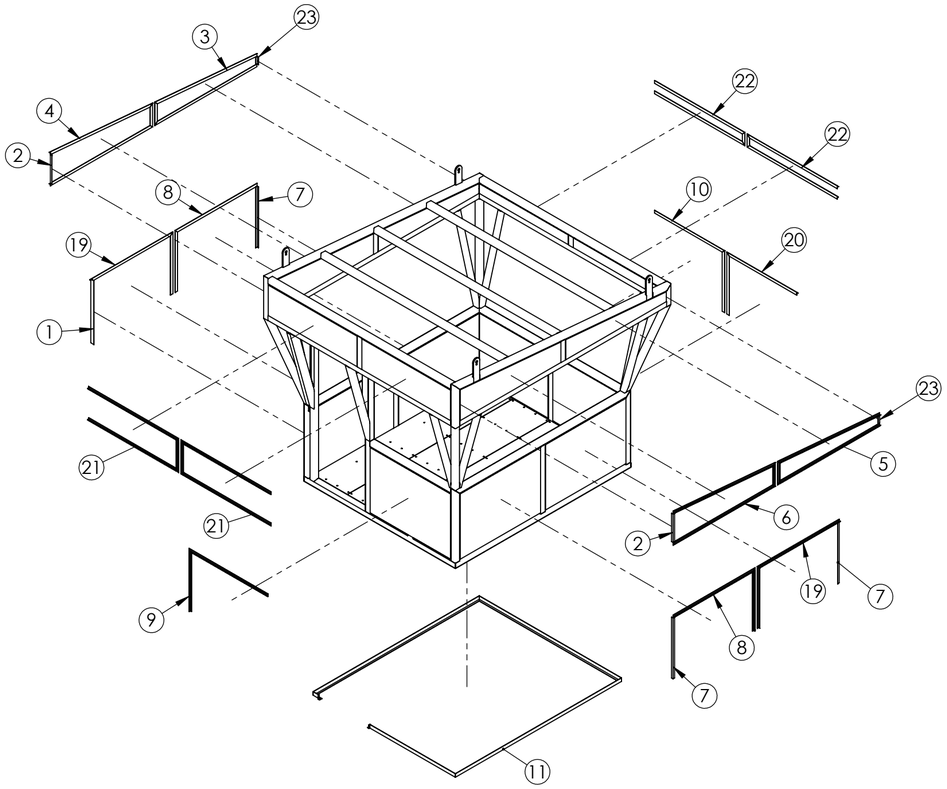

XFLAM WALL PANEL REVEALS & FLOOR COPING

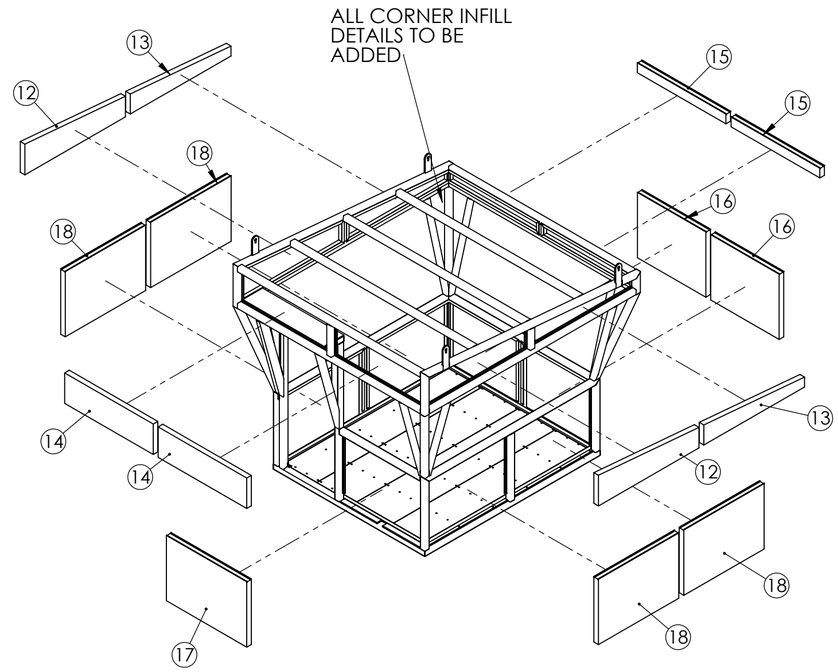

XFLAM WALL PANELS

XFLAM INTERNAL SHEETING WEIGHT - 231 kg

UNLESS OTHERWISE SPECIFIED: TOLERANCES: MACHINE + / - 0.25mm FABRICATION + / - 1.0 mm

DIMENSIONS IN MILLIMETRES

THIRD ANGLE PROJECTION

WEIGHT: kg

THIS DRAWING IS THE PROPERTY OF MECHANICAL ENGINEERING & CAD SERVICES (MECS) Pty Ltd & MUST NOT BE MANUFACTURED FROM,COPIED OR TRANSMITTED TO A THIRD PARTY WITHOUT THE PRIOR APPROVAL FROM MECHANICAL ENGINEERING & CAD SERVICES (MECS) Pty Ltd

MECS
Mechanical Engineering & CAD Services
11 Campbell Place WAGGA NSW 2650
Ph: - 0409 985 816
Email: nick@mecservices.com.au

CLIENT

RODDY ENGINEERING
14 Waratah St TUMUT NSW 2720
Ph: - 02 6947 4039
Email: roddyeng.com.au

TITLE: XFLAM INTERNAL SHEETING

DWG NO. 3956-50 REV A2

DRAWN N DE BRUYN DATE 18/07/2025 SCALE:1:50 SHEET 1 OF 1