ITEM	DRAWING No	DESCRIPTION	QTY.	MASS (kg)
1	3959-20	2325 BETWEEN POSTS	2	28.86
2	3959-95	75x50 RHS FASTENING END	6	0.12
3	3959-95	100x75 ON 75x25 RHS FASTENING END	6	0.16
4	3959-30	1050 BETWEEN POSTS	1	12.73
5	3959-10	2880 BETWEEN POSTS	1	35.40
6	3959-75	STAIRS HANDRAIL	1	41.86
7	3959-70	2808 BETWEEN POSTS	1	35.03
8	3959-60	1750 BETWEEN POSTS	1	21.50
9	3959-40	2945 BETWEEN POSTS	2	36.48
10	3959-80	3077 BETWEEN POSTS	2	37.89

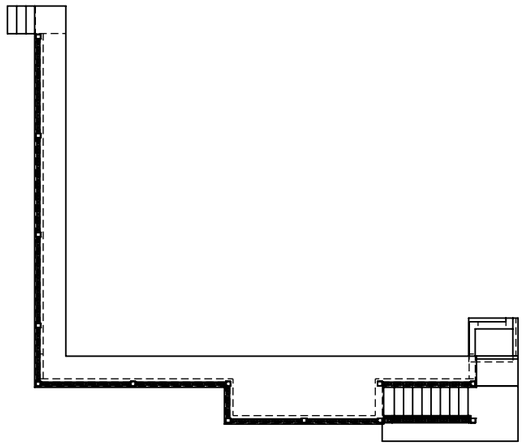

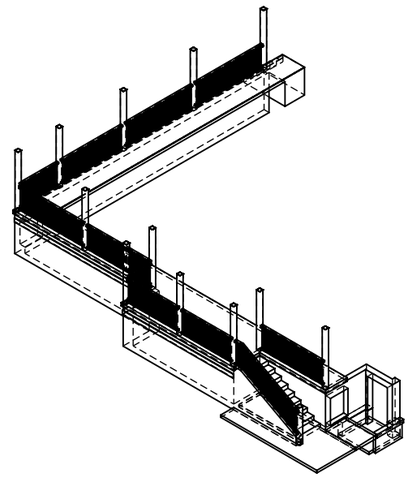

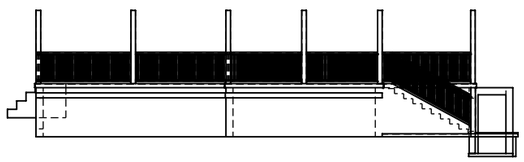

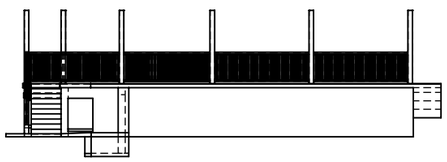

WEIGHT - kg

UNLESS OTHERWISE SPECIFIED: TOLERANCES: MACHINE + / - 0.25mm FABRICATION + / - 1.0 mm

THIS DRAWING IS THE PROPERTY OF MECHANICAL ENGINEERING & CAD SERVICES (MECS) Pty Ltd & MUST NOT BE MANUFACTURED FROM,COPIED OR TRANSMITTED TO A THIRD PARTY WITHOUT THE PRIOR APPROVAL FROM MECHANICAL ENGINEERING & CAD SERVICES (MECS) Pty Ltd

DIMENSIONS IN MILLIMETRES

THIRD ANGLE PROJECTION

MECS
Mechanical Engineering & CAD Services
11 Campbell Place WAGGA NSW 2650
Ph:- 0409 985 816
Email: nick@mecservices.com.au

TITLE:

DWG NO.

REV

A3

DRAWN

DATE

SCALE 1:200 SHEET 1 OF 1