DIMENSIONS IN MILLIMETRES

ITEM	DRAWING No	DESCRIPTION	QTY.	MASS (kg)
1	3959-10-15	50x1.6 SHS VERTICAL	10	0.75
2	3959-30-10	76x25x2.4 RHS UNDER TOP RAIL	1	1.07
3	3959-30-20	75x50x3.0 RHS BOTTOM RAIL	1	1.78
4	3953-30-05	100x50x3 RHS TOP RAIL	1	2.40

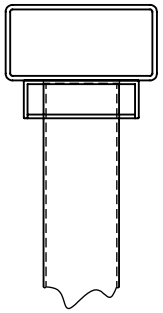

DETAIL A
SCALE 1 : 5

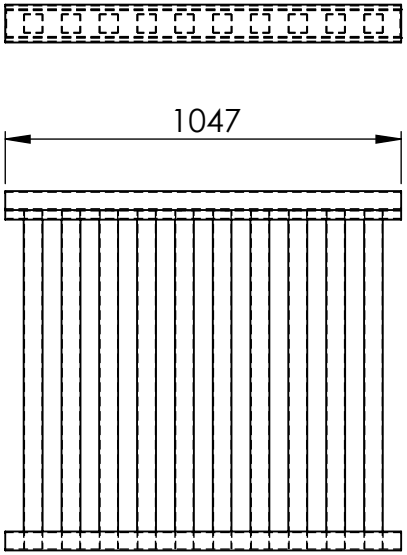

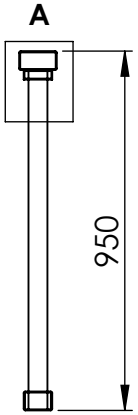

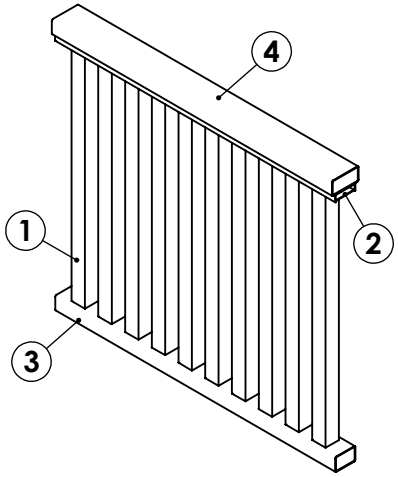

1050 BETWEEN POSTS WEIGHT - 12.73 kg

UNLESS OTHERWISE SPECIFIED: TOLERANCES: MACHINE + / - 0.25mm FABRICATION + / - 1.0 mm

THIS DRAWING IS THE PROPERTY OF MECHANICAL ENGINEERING & CAD SERVICES (MECS) Pty Ltd & MUST NOT BE MANUFACTURED FROM,COPIED OR TRANSMITTED TO A THIRD PARTY WITHOUT THE PRIOR APPROVAL FROM MECHANICAL ENGINEERING & CAD SERVICES (MECS) Pty Ltd

THIRD ANGLE PROJECTION

WEIGHT: 12.73 Kg

MECS
Mechanical Engineering & CAD Services
11 Campbell Place WAGGA NSW 2650
Ph: - 0409 985 816
Email: nick@mecservices.com.au

TITLE: 1050 BETWEEN POSTS

DWG NO. 3959-30 | A4

DRAWN N DE BRUYN | DATE 19/06/2025 | SCALE:1:20 | SHEET 1 OF 1