DIMENSIONS IN MILLIMETRES

ITEM NO.	QTY.	DESCRIPTION	LENGTH	MATERIAL
1	1	100x50x3 RHS UA4477	3077	6060

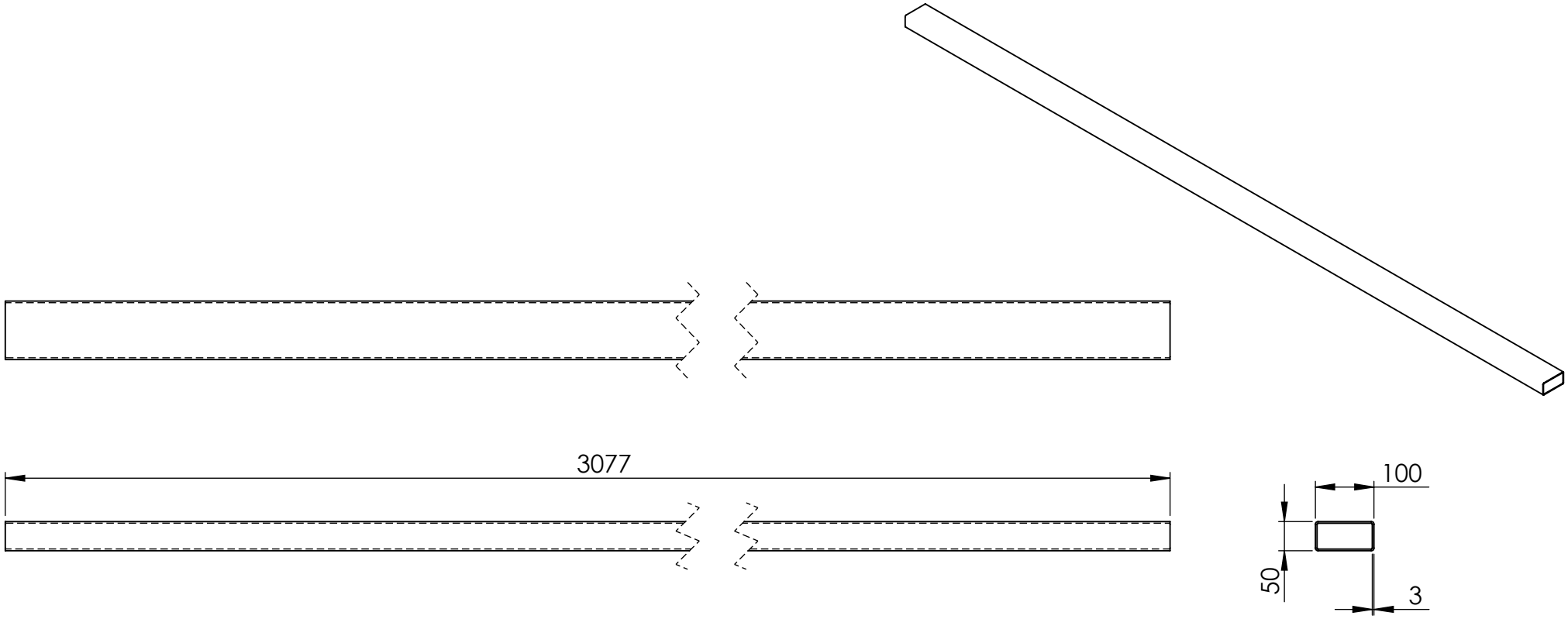

MATERIAL:- ALUMINUM

UNLESS OTHERWISE SPECIFIED: TOLERANCES: MACHINE + / - 0.25mm FABRICATION + / - 1.0 mm

THIS DRAWING IS THE PROPERTY OF MECHANICAL ENGINEERING & CAD SERVICES (MECS) Pty Ltd & MUST NOT BE MANUFACTURED FROM,COPIED OR TRANSMITTED TO A THIRD PARTY WITHOUT THE PRIOR APPROVAL FROM MECHANICAL ENGINEERING & CAD SERVICES (MECS) Pty Ltd

THIRD ANGLE PROJECTION

WEIGHT: 7 Kg

MECS
Mechanical Engineering & CAD Services
11 Campbell Place WAGGA NSW 2650
Ph: - 0409 985 816
Email: nick@mecservices.com.au

TITLE: 100x50x3 RHS TOP RAIL

DWG NO. 3953-70-05 REV A4

DRAWN N DE BRUYN DATE 10/06/2025 SCALE:1:10 SHEET 1 OF 1