DIMENSIONS IN MILLIMETRES

ITEM NO.	QTY.	DESCRIPTION	LENGTH	MATERIAL
1	1	75x50x3 UA4833	3077	6063-T6

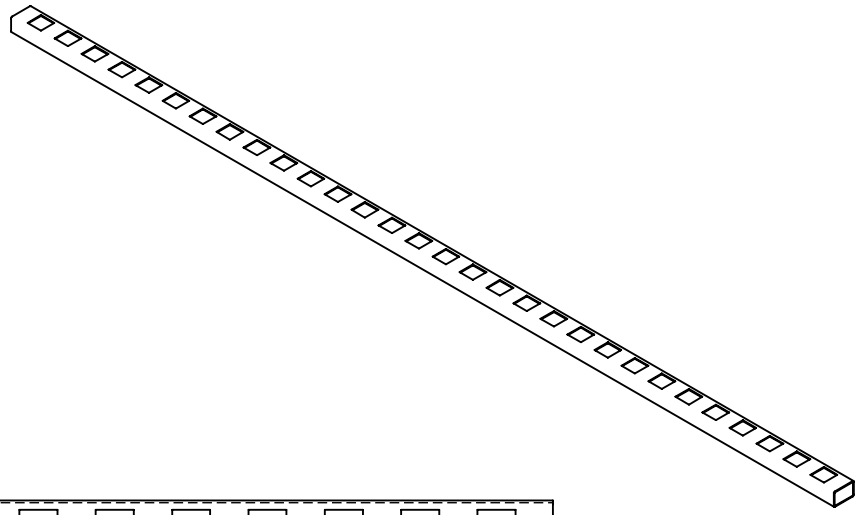

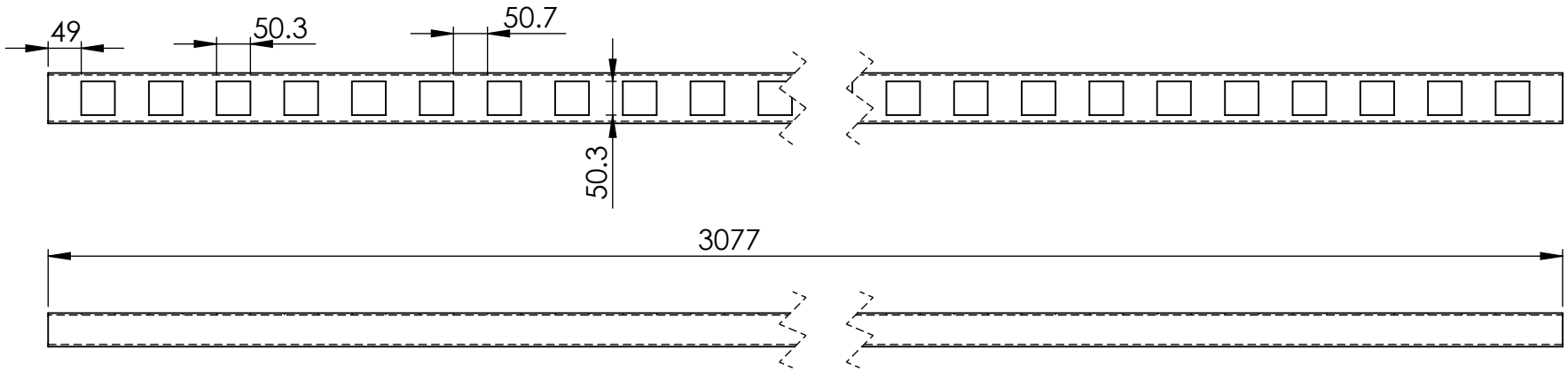

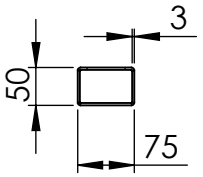

MATERIAL:- ALUMINUM

UNLESS OTHERWISE SPECIFIED: TOLERANCES: MACHINE + / - 0.25mm FABRICATION + / - 1.0 mm

THIS DRAWING IS THE PROPERTY OF MECHANICAL ENGINEERING & CAD SERVICES (MECS) Pty Ltd & MUST NOT BE MANUFACTURED FROM,COPIED OR TRANSMITTED TO A THIRD PARTY WITHOUT THE PRIOR APPROVAL FROM MECHANICAL ENGINEERING & CAD SERVICES (MECS) Pty Ltd

THIRD ANGLE PROJECTION

WEIGHT: 5 Kg

MECS
Mechanical Engineering & CAD Services
11 Campbell Place WAGGA NSW 2650
Ph: - 0409 985 816
Email: nick@mecservices.com.au

TITLE: 75x50x3.0 RHS BOTTOM RAIL

DWG NO. 3959-70-20 REV A4

DRAWN N DE BRUYN DATE 19/06/2025 SCALE:1:10 SHEET 1 OF 2