DIMENSIONS IN MILLIMETRES

ITEM NO.	DESCRIPTION	LENGTH	MATERIAL	MASS (kg)
1	100x50x3 RHS UA4477	326	6060	1
2	100x50x3 RHS UA4477	2953	6060	7

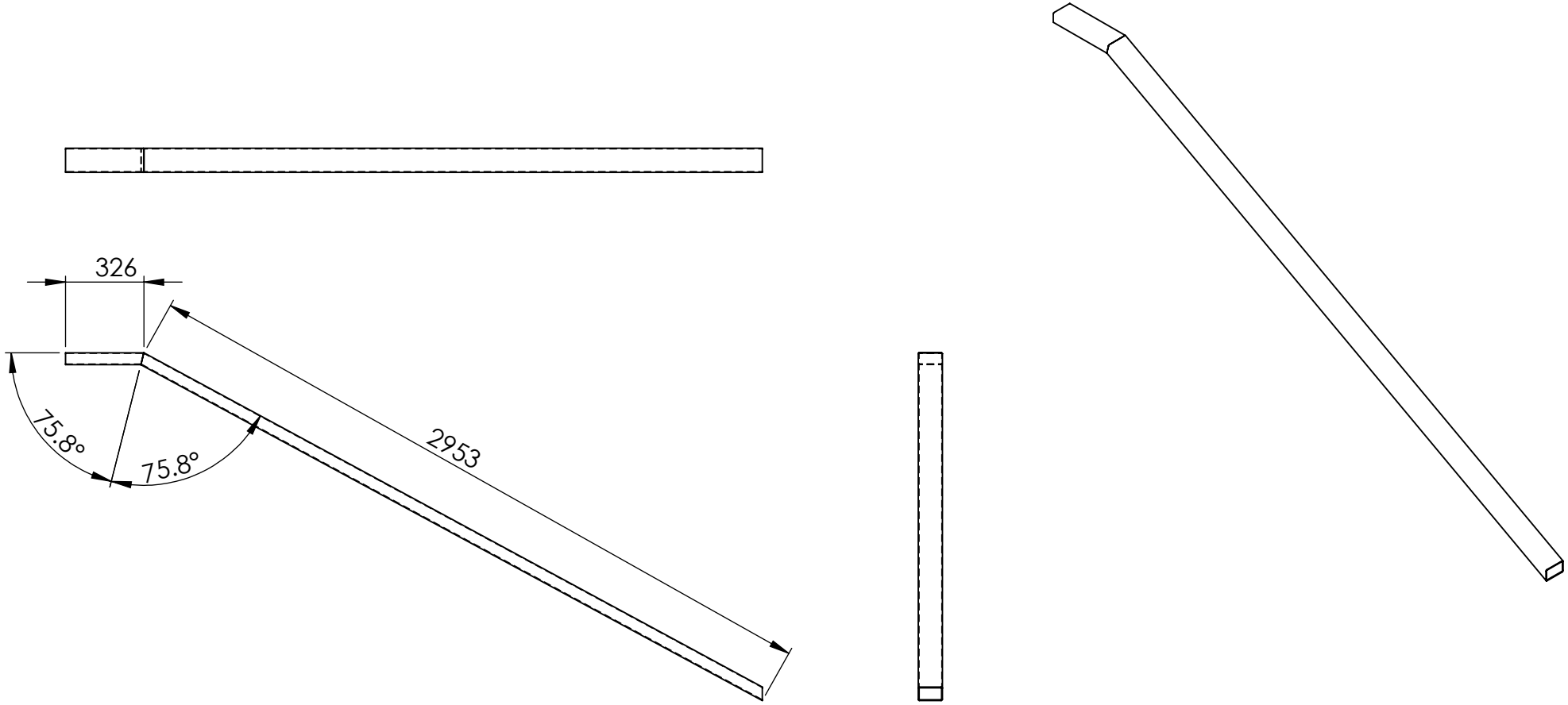

MATERIAL:- 6063-T6

UNLESS OTHERWISE SPECIFIED: TOLERANCES: MACHINE + / - 0.25mm FABRICATION + / - 1.0 mm

THIS DRAWING IS THE PROPERTY OF MECHANICAL ENGINEERING & CAD SERVICES (MECS) Pty Ltd & MUST NOT BE MANUFACTURED FROM,COPIED OR TRANSMITTED TO A THIRD PARTY WITHOUT THE PRIOR APPROVAL FROM MECHANICAL ENGINEERING & CAD SERVICES (MECS) Pty Ltd

THIRD ANGLE PROJECTION

WEIGHT: 7 Kg

MECS
Mechanical Engineering & CAD Services
11 Campbell Place WAGGA NSW 2650
Ph: - 0409 985 816
Email: nick@mecservices.com.au

TITLE: 100 x 50 RHS STAIRS TOP RAIL

DWG NO. 3959-75-10 REV A4

DRAWN N DE BRUYN DATE SCALE:1:25 SHEET 1 OF 1