DIMENSIONS IN MILLIMETRES

ITEM NO.	DESCRIPTION	LENGTH	QTY	MASS (kg)
1	75x50x3 UA4833	325	1	1

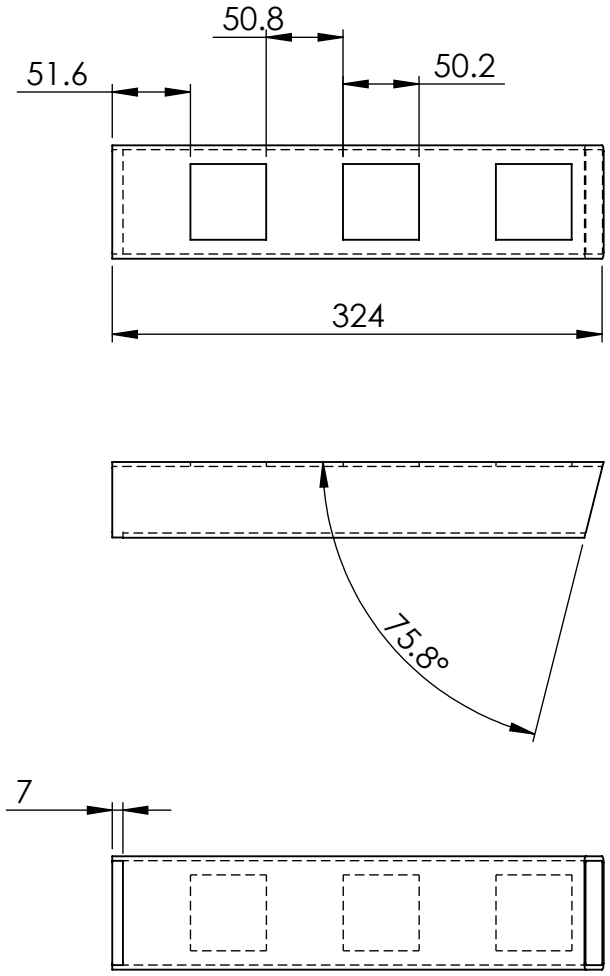

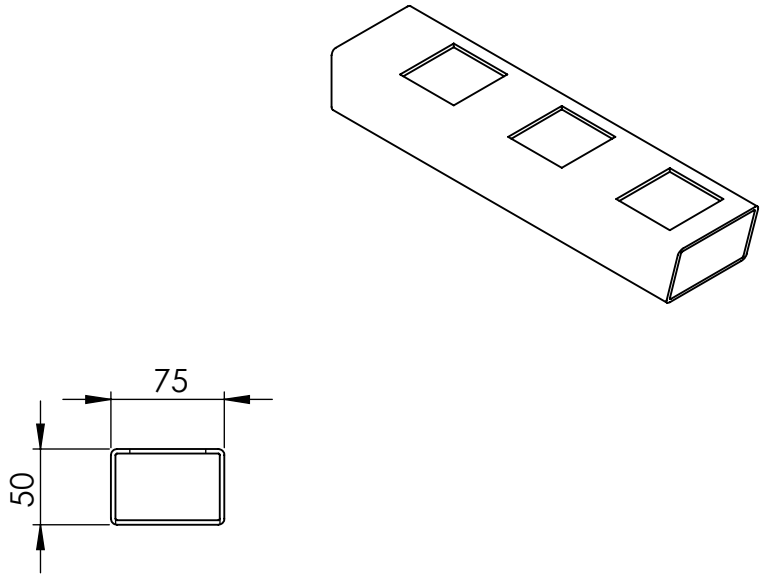

MATERIAL:- 6063-T6

UNLESS OTHERWISE SPECIFIED: TOLERANCES: MACHINE + / - 0.25mm FABRICATION + / - 1.0 mm

THIS DRAWING IS THE PROPERTY OF MECHANICAL ENGINEERING & CAD SERVICES (MECS) Pty Ltd & MUST NOT BE MANUFACTURED FROM,COPIED OR TRANSMITTED TO A THIRD PARTY WITHOUT THE PRIOR APPROVAL FROM MECHANICALENGINEERING & CAD SERVICES (MECS) Pty Ltd

THIRD ANGLE PROJECTION

WEIGHT: 1 Kg

MECS
Mechanical Engineering & CAD Services
11 Campbell Place WAGGA NSW 2650
Ph: - 0409 985 816
Email: nick@mecservices.com.au

TITLE:

75 x 50 RHS BOTTOM CHORD

DWG NO. 3959-75-20-10 | A4

DRAWN N DE BRUYN | DATE 7/10/2025 | SCALE:1:5 | SHEET 1 OF 2