ITEM	DRAWING No	DESCRIPTION	QTY.	MASS (kg)
1	3959-10-15	50x1.6 SHS VERTICAL	3	0.75
2	3959-75-10	100 x 50 RHS STAIRS TOP RAIL	1	7.45
3	3959-75-15	75 x 50 RHS STAIRS UNDER TOP RAIL	1	4.06
4	3959-75-20	75 x 50 RHS STAIRS BOTTOM RAIL	1	5.50
5	3959-75-25	50x1.6 SHS VERTICAL STAIRS	25	0.75
6	3959-75-30	46x3.5 CHS STAIRS TOP RAIL	1	3.95
7	3959-75-35	16 DIA HANDRAIL SUPPORT	4	0.06
8	3959-75-20-10	75 x 50 RHS BOTTOM CHORD	1	0.54
9	3959-75-20-20	75 x 50 RHS BOTTOM CHORD ANGLED	1	5.01
10	3959-75-15-10	75 x 25 RHS TOP CHORD	1	0.28
11	3959-75-15-20	75 x 25 RHS TOP CHORD ANGLED	1	3.10
12	3959-75-35-10	HANDRAIL SUPPORT PLATE	4	0.02

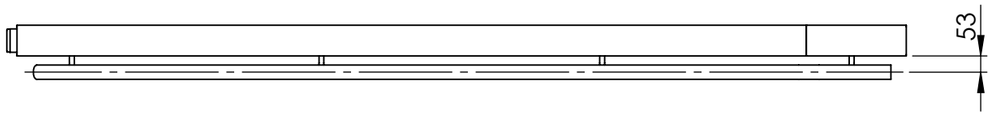

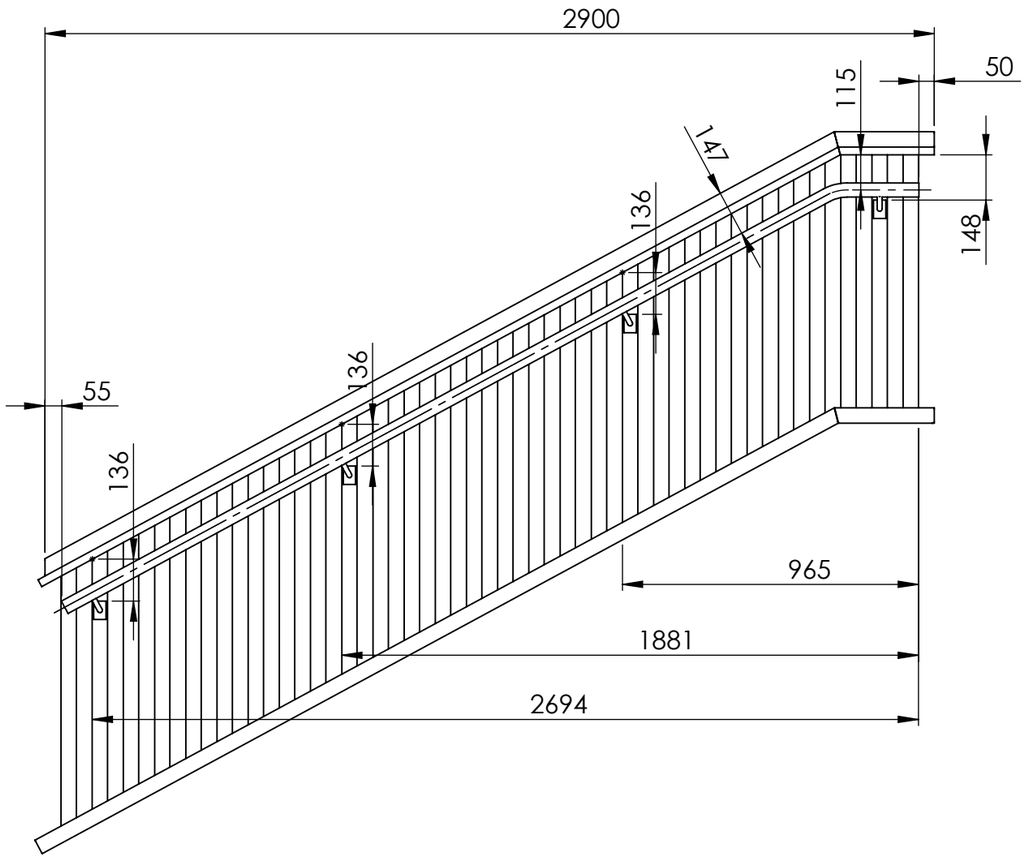

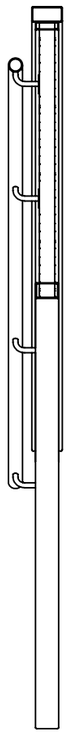

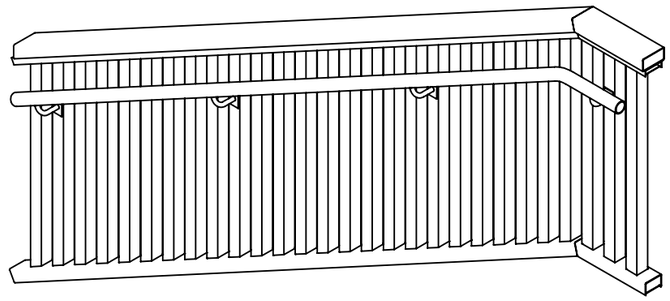

STAIRS HANDRAIL WEIGHT - 41.54 kg

UNLESS OTHERWISE SPECIFIED: TOLERANCES: MACHINE + / - 0.25mm FABRICATION + / - 1.0 mm

THIS DRAWING IS THE PROPERTY OF MECHANICAL ENGINEERING & CAD SERVICES (MECS) Pty Ltd & MUST NOT BE MANUFACTURED FROM,COPIED OR TRANSMITTED TO A THIRD PARTY WITHOUT THE PRIOR APPROVAL FROM MECHANICAL ENGINEERING & CAD SERVICES (MECS) Pty Ltd

DIMENSIONS IN MILLIMETRES

THIRD ANGLE PROJECTION

MECS
Mechanical Engineering & CAD Services
11 Campbell Place WAGGA NSW 2650
Ph:- 0409 985 816
Email: nick@mecservices.com.au

TITLE: STAIRS HANDRAIL

DWG NO. 3959-75 REV A3

DRAWN N DE BRUYN DATE 3/08/2025 SCALE 1:20 SHEET 1 OF 1