DIMENSIONS IN MILLIMETRES

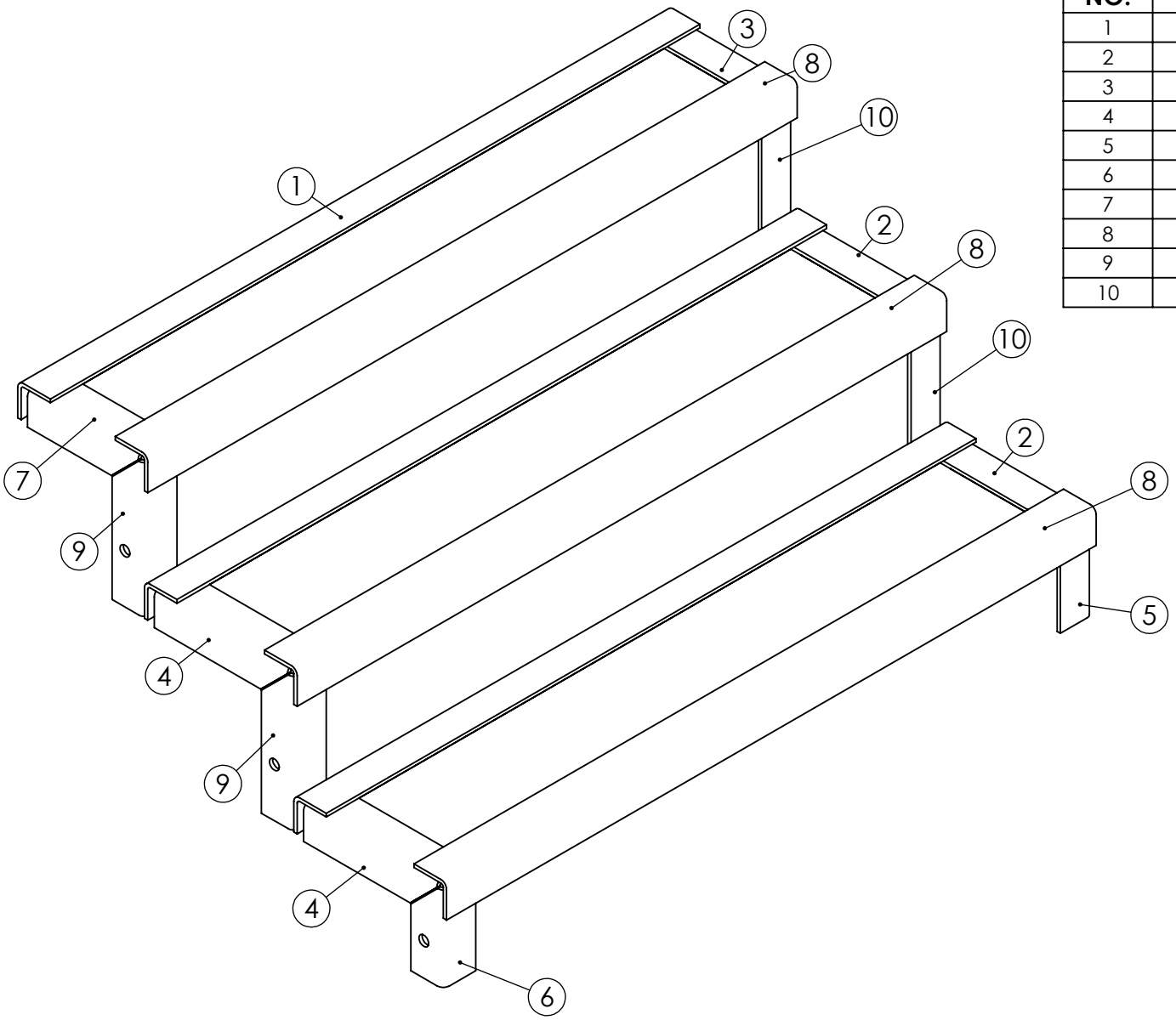


| ITEM NO. | DESCRIPTION | LENGTH | QTY |
|---|---|---|---|
| 1 | 50 x 5 DURAGAL EQUAL ANGLE | 1000 | 1 |
| 2 | 50 x 5 DURAGAL EQUAL ANGLE | 205 | 2 |
| 3 | 50 x 5 DURAGAL EQUAL ANGLE | 170 | 1 |
| 4 | 50 x 5 DURAGAL EQUAL ANGLE | 205 | 2 |
| 5 | 50 x 5 DURAGAL EQUAL ANGLE | 130 | 1 |
| 6 | 50 x 5 DURAGAL EQUAL ANGLE | 130 | 1 |
| 7 | 50 x 5 DURAGAL EQUAL ANGLE | 170 | 1 |
| 8 | 50 x 5 DURAGAL EQUAL ANGLE | 1000 | 5 |
| 9 | 50 x 5 DURAGAL EQUAL ANGLE | 205 | 2 |
| 10 | 50 x 5 DURAGAL EQUAL ANGLE | 205 | 2 |

**MATERIAL:-** DURAGAL

UNLESS OTHERWISE SPECIFIED: TOLERANCES: MACHINE + / - 0.25mm FABRICATION + / - 1.0 mm

THIS DRAWING IS THE PROPERTY OF MECHANICAL ENGINEERING & CAD SERVICES (MECS) Pty Ltd & MUST NOT BE MANUFACTURED FROM,COPIED OR TRANSMITTED TO A THIRD PARTY WITHOUT THE PRIOR APPROVAL FROM MECHANICAL ENGINEERING & CAD SERVICES (MECS) Pty Ltd

THIRD ANGLE PROJECTION

WEIGHT: 29 Kg

MECS
Mechanical Engineering & CAD Services
11 Campbell Place WAGGA NSW 2650
Ph: - 0409 985 816
Email: nick@mecservices.com.au

TITLE: 50x5 EA DURAGAL DUNGEON STAIRS

DWG NO. 3959-80-10 REV A4

DRAWN N DE BRUYN DATE SCALE:1:10 SHEET 1 OF 3

DIMENSIONS IN MILLIMETRES

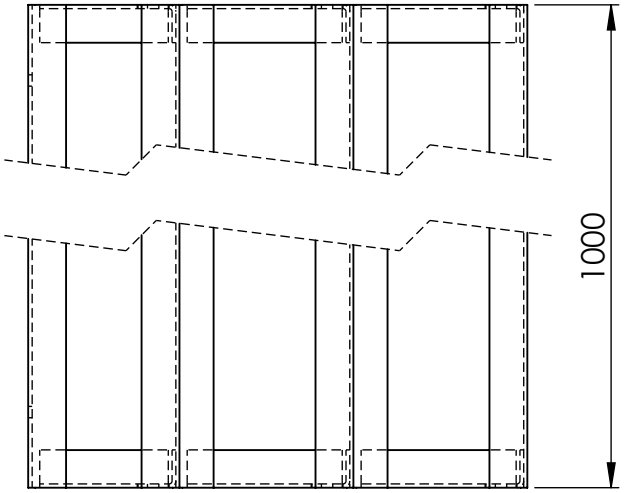


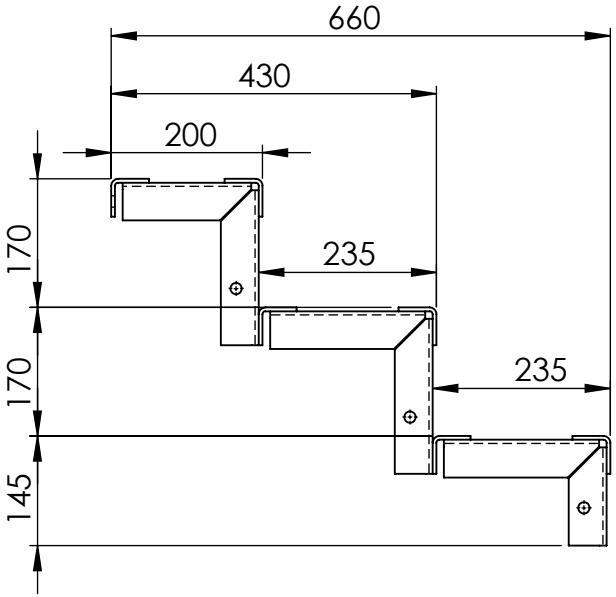


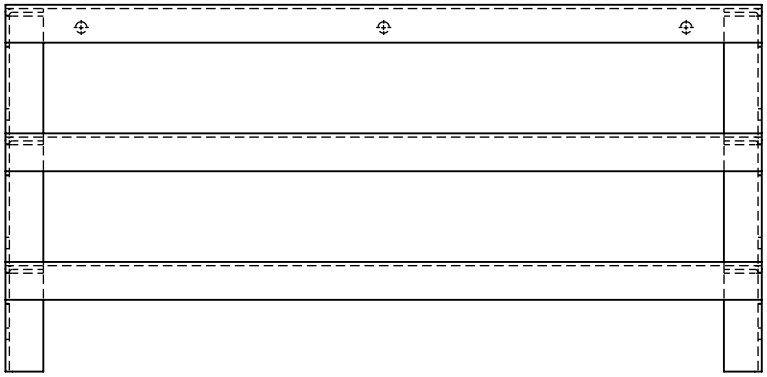

**MATERIAL:-** DURAGAL

UNLESS OTHERWISE SPECIFIED: TOLERANCES: MACHINE + / - 0.25mm FABRICATION + / - 1.0 mm

THIS DRAWING IS THE PROPERTY OF MECHANICAL ENGINEERING & CAD SERVICES (MECS) Pty Ltd & MUST NOT BE MANUFACTURED FROM,COPIED OR TRANSMITTED TO A THIRD PARTY WITHOUT THE PRIOR APPROVAL FROM MECHANICAL ENGINEERING & CAD SERVICES (MECS) Pty Ltd

THIRD ANGLE PROJECTION

WEIGHT: 29 Kg

MECS
Mechanical Engineering & CAD Services
11 Campbell Place WAGGA NSW 2650
Ph: - 0409 985 816
Email: nick@mecservices.com.au

TITLE: 50x5 EA DURAGAL DUNGEON STAIRS

| | | |
|---|---|---|
| DWG NO. 3959-80-10 | REV | A4 |
| DRAWN N DE BRUYN | DATE | SCALE:1:10 | SHEET 2 OF 3 |

DIMENSIONS IN MILLIMETRES

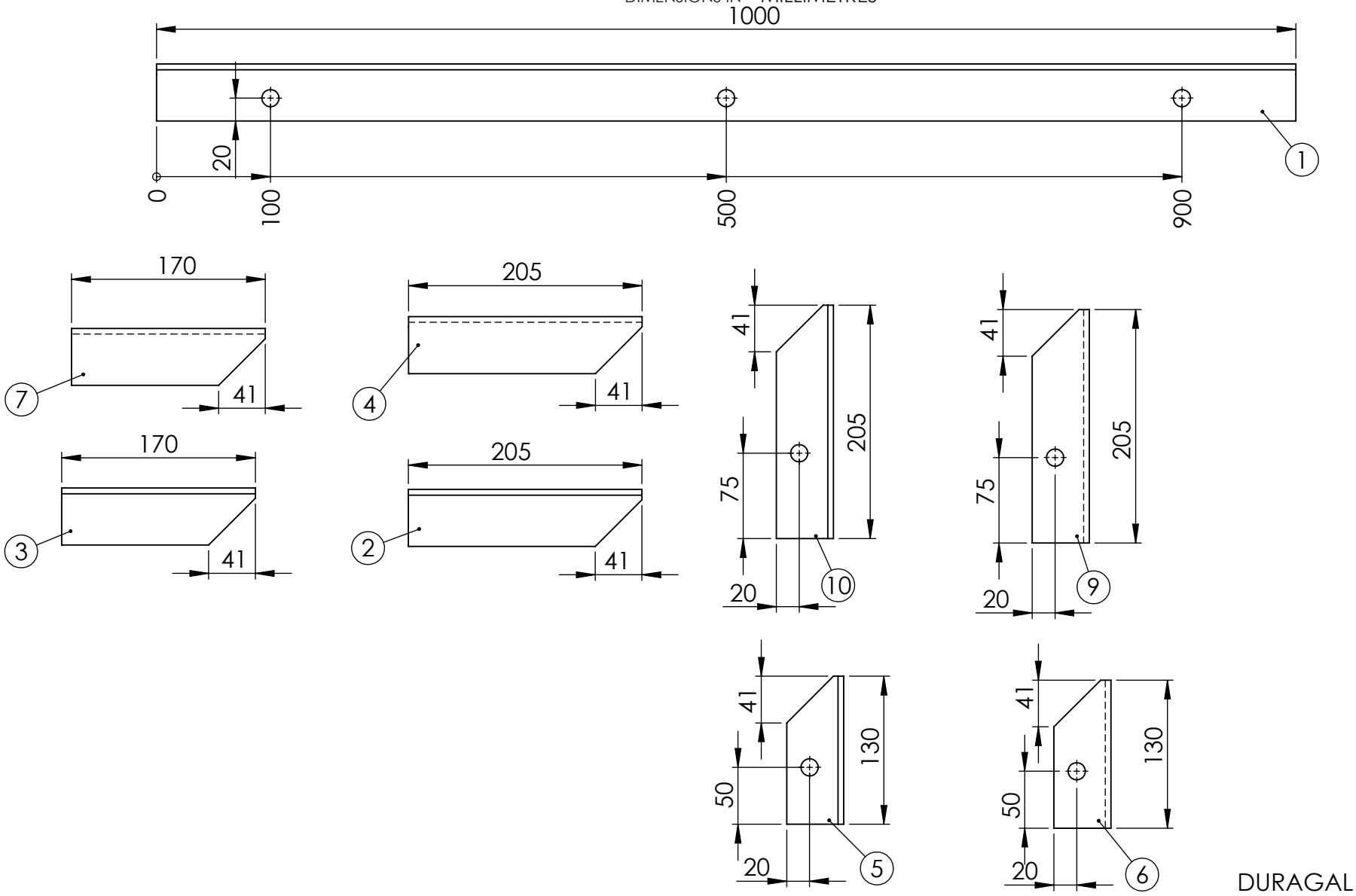


DURAGAL

UNLESS OTHERWISE SPECIFIED: TOLERANCES: MACHINE + / - 0.25mm FABRICATION + / - 1.0 mm

THIS DRAWING IS THE PROPERTY OF MECHANICAL ENGINEERING & CAD SERVICES (MECS) Pty Ltd & MUST NOT BE MANUFACTURED FROM,COPIED OR TRANSMITTED TO A THIRD PARTY WITHOUT THE PRIOR APPROVAL FROM MECHANICAL ENGINEERING & CAD SERVICES (MECS) Pty Ltd

THIRD ANGLE PROJECTION

WEIGHT: 29 Kg

MECS
Mechanical Engineering & CAD Services
11 Campbell Place WAGGA NSW 2650
Ph: - 0409 985 816
Email: nick@mecservices.com.au

TITLE: 50x5 EA DURAGAL DUNGEON STAIRS

| | | | |
|---|---|---|---|
| DWG NO. 3959-80-10 | | | A4 |
| DRAWN N DE BRUYN | DATE | SCALE:1:5 | SHEET 3 OF 3 |