NOTES:
- Flanges are to be welded and inspected in accordance with SHL-MEC-119
- All bare metal surfaces are painted in accordance with SHL-GEN-123
- All modified pipework shall be pressure tested and cleaned internally as per SHL-MEC-119
- Pipework shall be setup in work shop as per site installation prior to welding new flanges

ITEM	DRAWING No	DESCRIPTION	QTY.	MASS (kg)
1	OEM-100-300-SO-MS	100NB - 300lb SLIP ON FLANGE MILD STEEL	2	9.29
2	3963-20	100NB EXISTING PIPE CUTTING DETAIL	1	87.48
3	OEM-100-H-SO-MS	100NB TABLE H FLANGE SLIP ON WELD MS	2	6

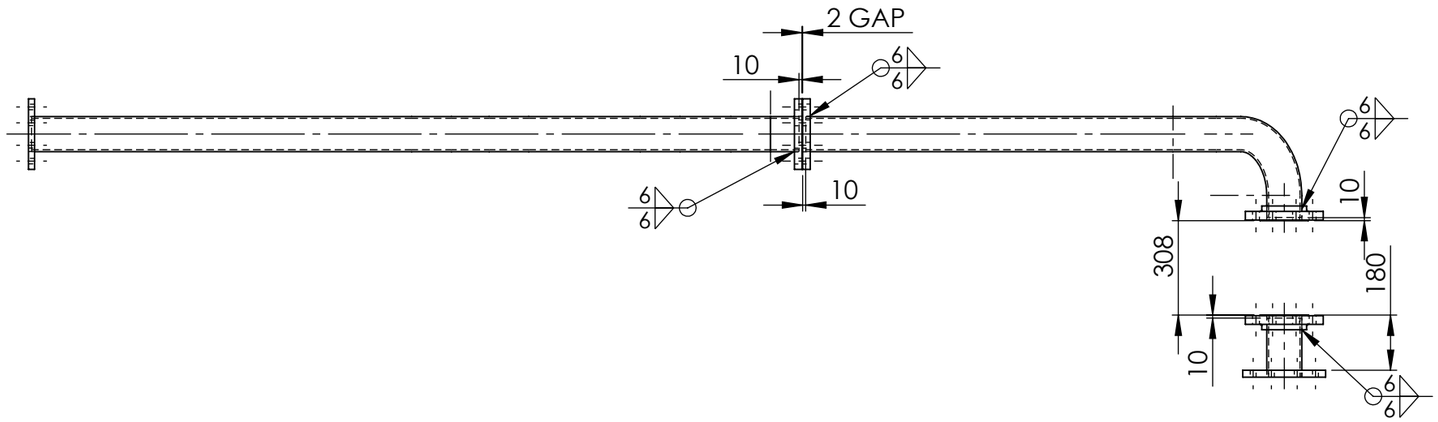

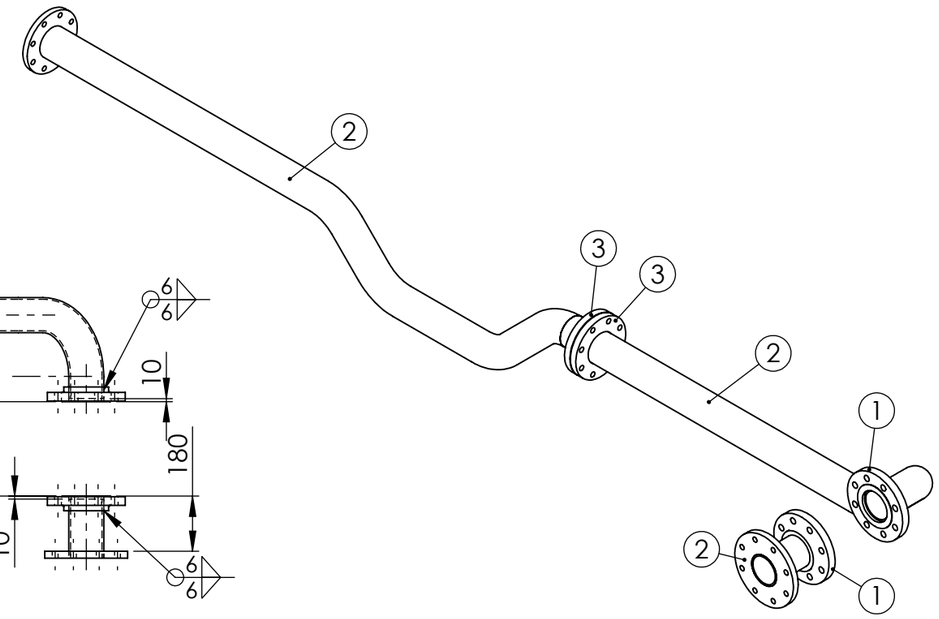

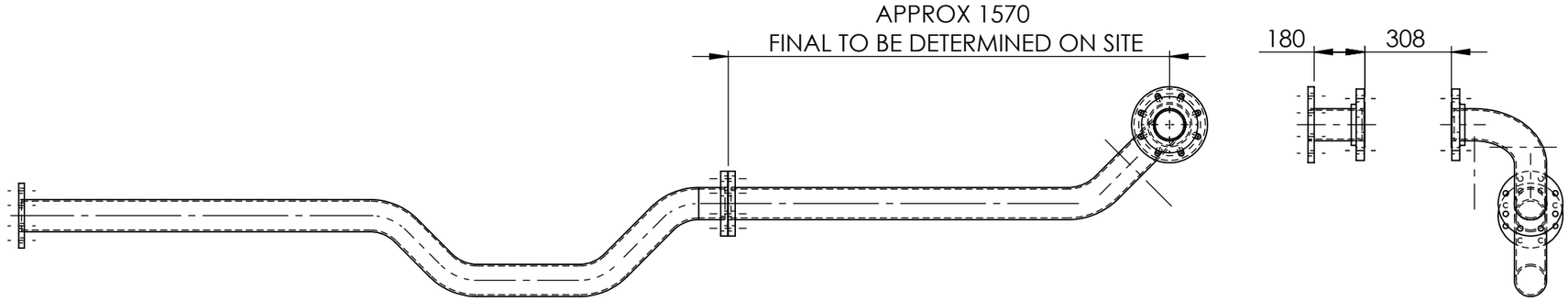

100NB PIPE & FLANGE ASSEMBLY WEIGHT - 117.26 kg

REV	NAME & DATE	DESCRIPTION

UNLESS OTHERWISE SPECIFIED:
TOLERANCES: MACHINE + / - 0.25mm
FABRICATION + / - 1.0 mm

THIS DRG SUPPLIED BY
RODDY ENGINEERING
14 Waratah St, TUMUT NSW 2720
Ph: 02 6947 4039

DRAWING No. 3963-15
REV:

DRAWN N DE BRUYN 8/07/2025
DRAWING CHECKED
DESIGNED M.CRANE 17/12/2025
DESIGN CHECKED S. PASK 15/01/2025
SCALE 1:20
WORK ORDER No WO424840
APPROVED K. CALLAGHAN 9/07/2025
SECTION No/KKS
A3 SHEET SIZE

snowyhydro LIMITED

BLOWERING POWER STATION
GOVENOR PIPING SET
GUIDE VANE SERVOMOTOR CLOSING PIPE
MECHANICAL DETAIL

SK-7595

REV

SHEET 1 OF 1

0,0