ITEM NO.	QTY.	DESCRIPTION	LENGTH	MATERIAL
1	1	50x50x3 SHS	440	AS 1163-C350LO
2	1	50x50x3 SHS	375	AS 1163-C350LO

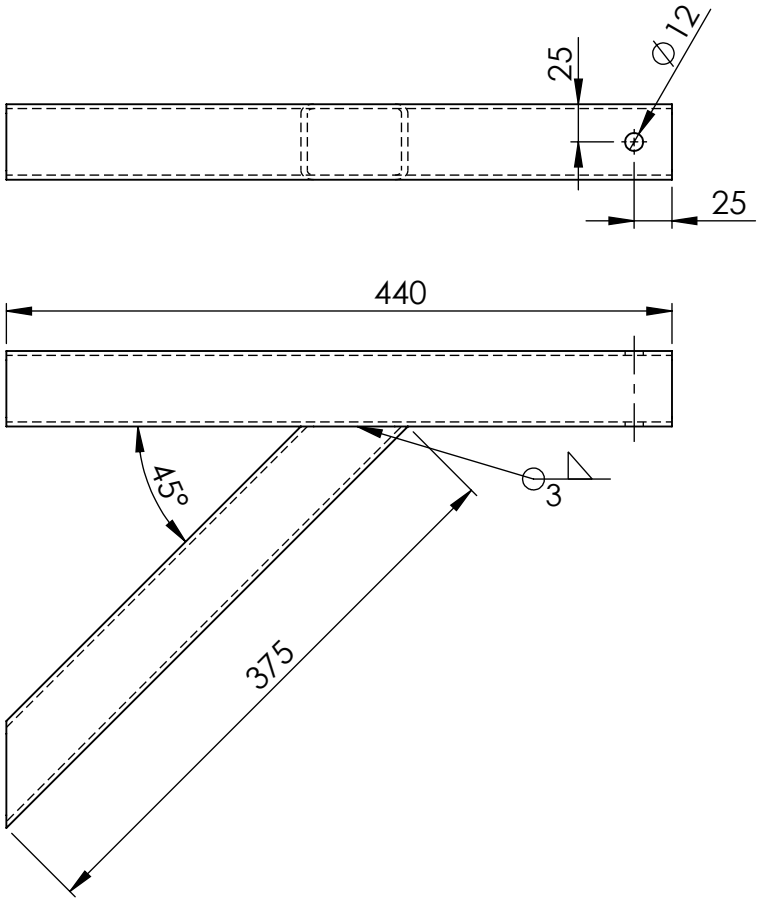

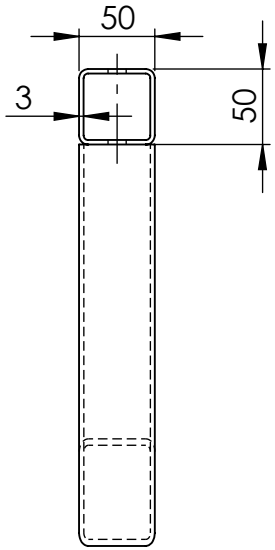

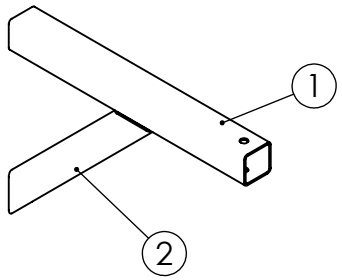

MATERIAL:- MILD STEEL

UNLESS OTHERWISE SPECIFIED: TOLERANCES: MACHINE + / - 0.25mm FABRICATION + / - 1.0 mm

DIMENSIONS IN MILLIMETRES

THIS DRAWING IS THE PROPERTY OF MECHANICAL ENGINEERING & CAD SERVICES (MECS) Pty Ltd & MUST NOT BE MANUFACTURED FROM,COPIED OR TRANSMITTED TO A THIRD PARTY WITHOUT THE PRIOR APPROVAL FROM MECHANICAL ENGINEERING & CAD SERVICES (MECS) Pty Ltd

MECS
Mechanical Engineering & CAD Services
11 Campbell Place WAGGA NSW 2650
Ph: - 0409 985 816
Email: nick@mecservices.com.au

THIRD ANGLE PROJECTION

WEIGHT: 3 kg

CLIENT

RODDY ENGINEERING
14 Waratah St TUMUT NSW 2720
Ph: - 02 6947 4039
Email: roddyeng.com.au

TITLE:

50x3 SHS-PIPE SUPPORT BRACKET

DWG NO. 3963-35-20 | A4

DRAWN N DE BRUYN | DATE 21/07/2025 | SCALE:1:5 | SHEET 1 OF 2