DIMENSIONS IN MILLIMETRES

ITEM	DRAWING No	DESCRIPTION	QTY.	MASS (kg)
1	OEM-2844-80NB-SHL	VALVE 2843 - Y STRAINER 80 NB ANSI 150	1	0.0
2	OEM-2843-80NB-SHL	VALVE 2843 - 80NB GATE VALVE ANSI 150	1	
3	OEM-80NB-JIS10K-3	80NB JIS10K 3.0 mm C-4430 GASKET	1	0.1
4	OEM-80NB-JIS5K-3	80NB JIS5K 3.0 mm C-4430 GASKET	1	0.1
5	OEM-80NB-150-15	80NB 150LB 1.5mm C-4400 GASKET	4	0
6	13-2844-1	UNIT 13 VALVE 2844 PIPE 1	1	12.46
7	13-2843-A	UNIT 13 VALVE 2843 PIPE 1	1	22.97
8	13-2843-1	UNIT 13 VALVE 2844 PIPE	1	16.41
9	5-8_UNC-AT-80	5/8 UNC ALL THREAD Gr 8 x 80 LONG	8	0.12
10	5-8_UNC-AT-70	5/8 UNC ALL THREAD Gr 8 x 70 LONG	4	0.11
11		5/8 UNC HEX NUT ZP	12	
12		16 DIA MYLAR INSULATION SLEEVE 25 LONG	12	0.00
13		M16 FLAT WASHER 304 S/S (30x17.5x1.5)	32	0.01
14		M16 FLAT WASHER HIGH TENSILE ZP (30x17.5x3)	12	0.01
15		M16 G10 EXPOY FLAT WASHER	12	0.00
16		M16x2.0 HEX NUT 304 S/S	16	0.06
17		M16x2.0 x 70 HEX BOLT 304 S/S	16	0.2

RED EYE QR CODE AREA

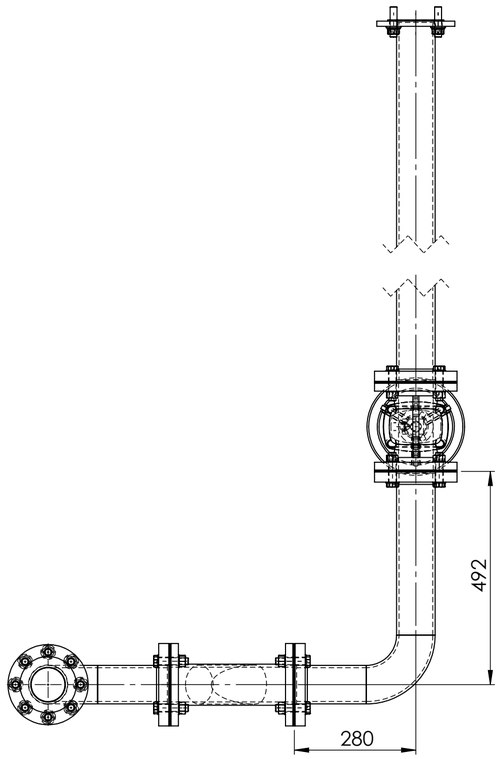

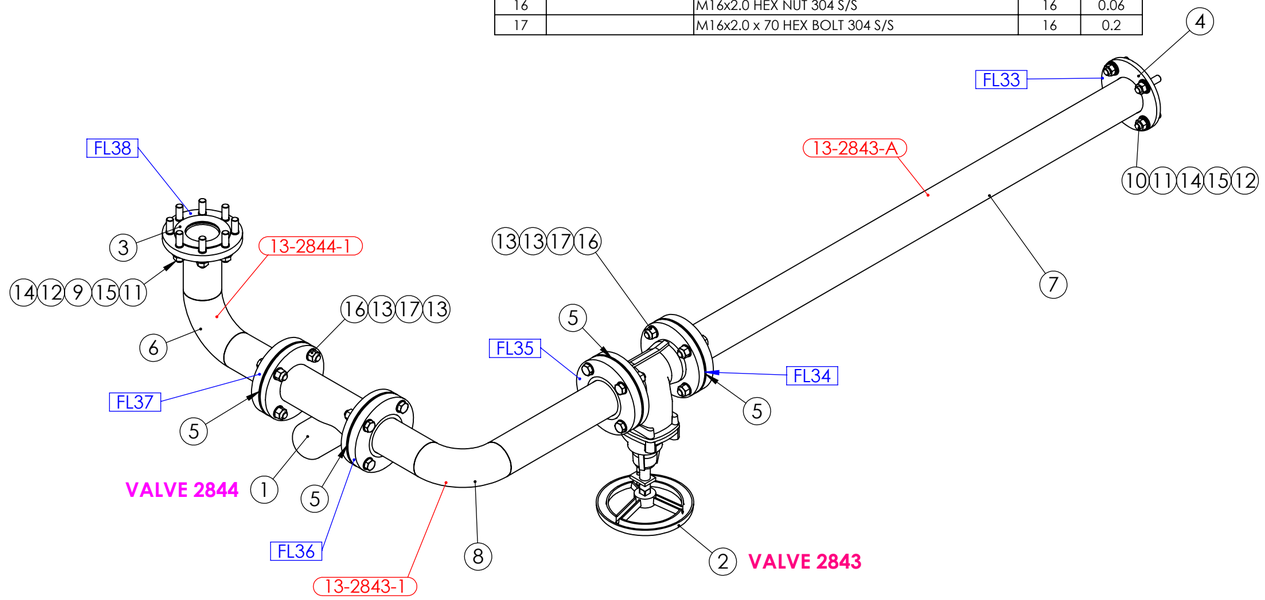

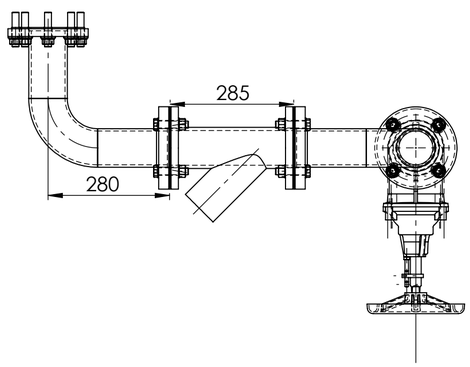

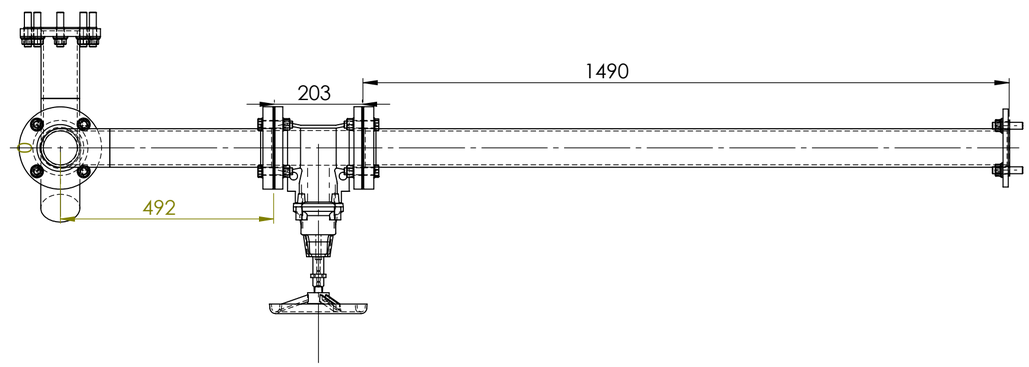

PIPEWORK MANUFACTURED OF A JIG - FLANGES AS PER DRAWING
DIMENSIONS ARE APPROXIMATE

UNIT 13 -VALVES 2843 & 2844 PIPE ASSEMBLY WEIGHT -83.44 kg

REV	NAME & DATE	DESCRIPTION

UNLESS OTHERWISE SPECIFIED:
TOLERANCES: MACHINE + / - 0.25mm
FABRICATION + / - 1.0 mm

THIS DRG SUPPLIED BY
RODDY ENGINEERING
14 Waratah St, TUMUT NSW 2720
Ph: 02 6947 4039

DRAWING No. 3974-13-32 REV:

DRAWN N DE BRUYN 17/09/2025
DRAWING CHECKED
DESIGNED
DESIGN CHECKED
SCALE 1:10
WORK ORDER No
APPROVED
SECTION No/KKS
A2 SHEET SIZE

snowyhydro LIMITED

M2 POWER STATION UNIT 13
VALVES 2843-2844 PIPE ASSEMBLY

SMA-DRG-NO

REV

SHEET 1 OF 1