| ITEM | DRAWING No | DESCRIPTION | QTY. | MASS (kg) |
|---|---|---|---|---|
| 1 | OEM-M12-USN-304 | M12x1.75 UNISTRUT NUT 304 S/S | 2 | |
| 2 | 4229-20-20 | 80NB DOUBLE BOLTED CLAMP HALF | 2 | 0.41 |
| 3 | 4229-10-10 | 80NB BRACKET TO SUIT DOUBLE BOLTED CLAMP | 1 | 0.81 |
| 4 | | M12 FLAT WASHER 304 S/S (24x14x1.5) | 6 | 0.00 |
| 5 | | M12x1.75 HEX NUT 304 S/S | 2 | |
| 6 | | M12x1.75 x 35 HEX BOLT 304 S/S | 2 | 0.0 |
| 7 | | M12x1.75 x 45 HEX BOLT 304 S/S | 2 | 0.1 |

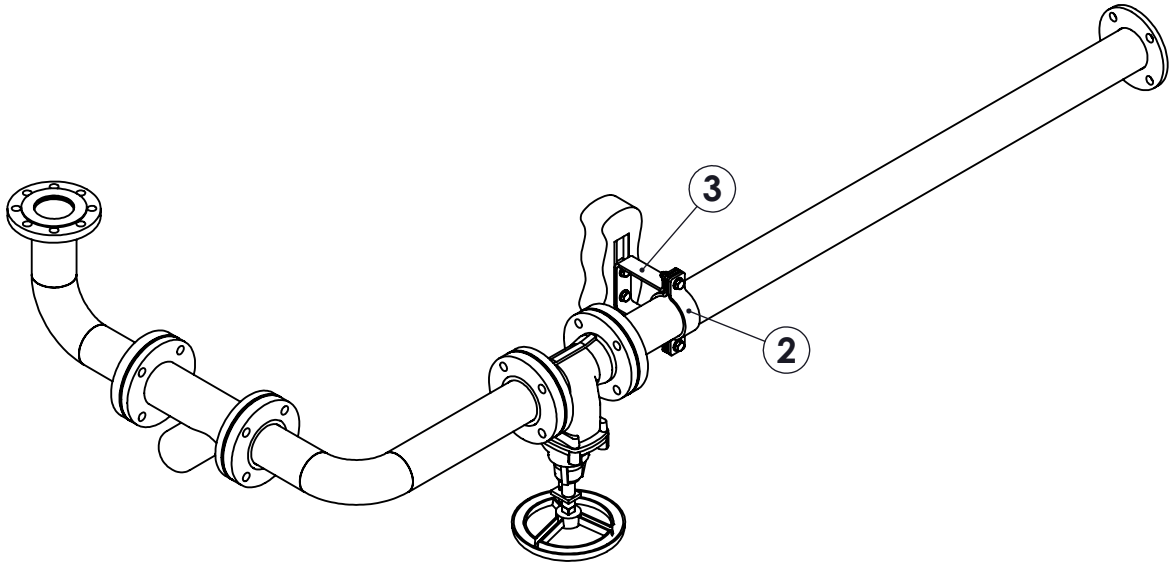


UNLESS OTHERWISE SPECIFIED: TOLERANCES: MACHINE + / - 0.25mm FABRICATION + / - 1.0 mm

DIMENSIONS IN MILLIMETRES

THIS DRAWING IS THE PROPERTY OF MECHANICAL ENGINEERING & CAD SERVICES (MECS) Pty Ltd & MUST NOT BE MANUFACTURED FROM,COPIED OR TRANSMITTED TO A THIRD PARTY WITHOUT THE PRIOR APPROVAL FROM MECHANICAL ENGINEERING & CAD SERVICES (MECS) Pty Ltd

MECS
Mechanical Engineering & CAD Services
11 Campbell Place WAGGA NSW 2650
Ph: - 0409 985 816
Email: nick@mecservices.com.au

THIRD ANGLE PROJECTION

WEIGHT: kg

CLIENT

RODDY ENGINEERING
14 Waratah St TUMUT NSW 2720
Ph: - 02 6947 4039
Email: roddyeng.com.au

TITLE: UNIT 13 -VALVES 2843 2844 SADDLE ASSEMBLY

DWG NO. 3974-13-38-10 | A4

DRAWN N DE BRUYN | DATE 8/12/2025 | SCALE:1:15 | SHEET 1 OF 1