DIMENSIONS IN MILLIMETRES

ITEM	DRAWING No	DESCRIPTION	QTY.	MASS (kg)
1	OEM-65-E-15	65NB AS 2129 TABLE E 1.5mm C-4400 GASKET	2	0
2	OEM-50-JIS5K-6327-15	50NB JIS5K 1.5mm C-6327 GASKET	12	0
3		1/2" FLAT WASHER ZP	48	0.01
4		1/2" UNC HEX NUT ZP	48	
5		1/2" UNC x 2 1/4" ZP BOLT Gr 8	48	0.08
6		5/8 UNC HEX NUT ZP	8	
7		5/8"UNC x 2 1/4" BOLT Gr8 ZP	8	0.1
8		M16 FLAT WASHER ZP (30x18x2)	16	0.01

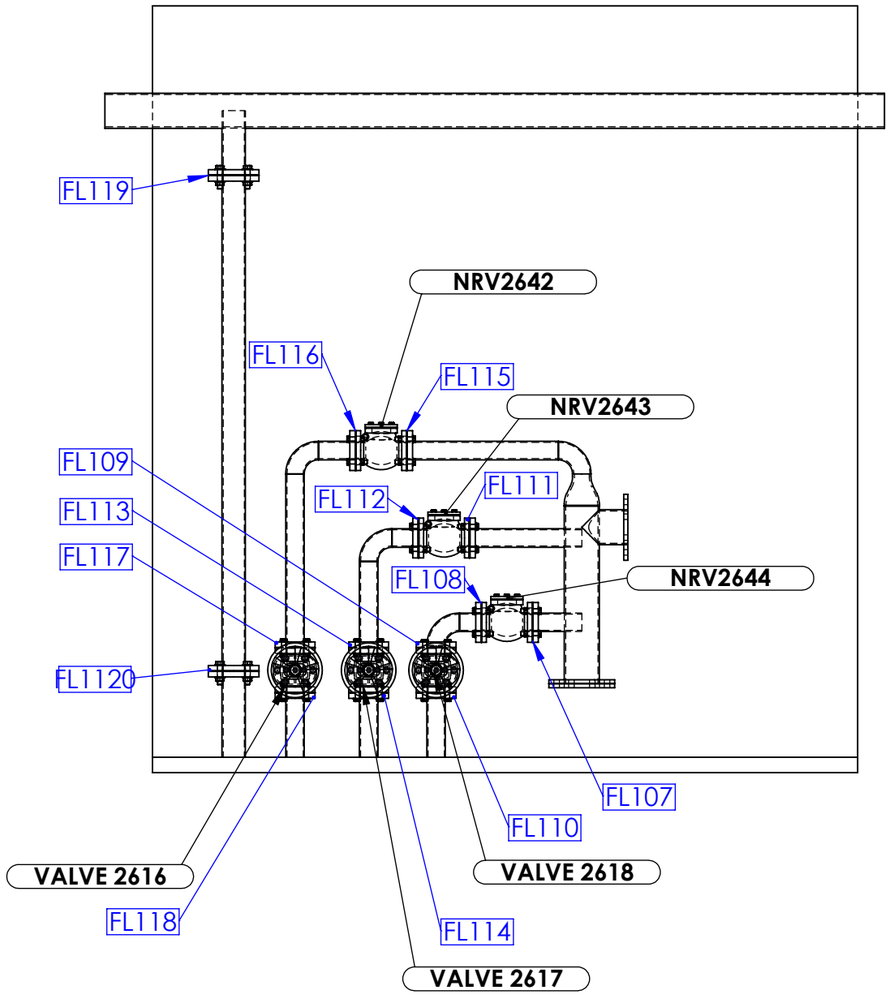

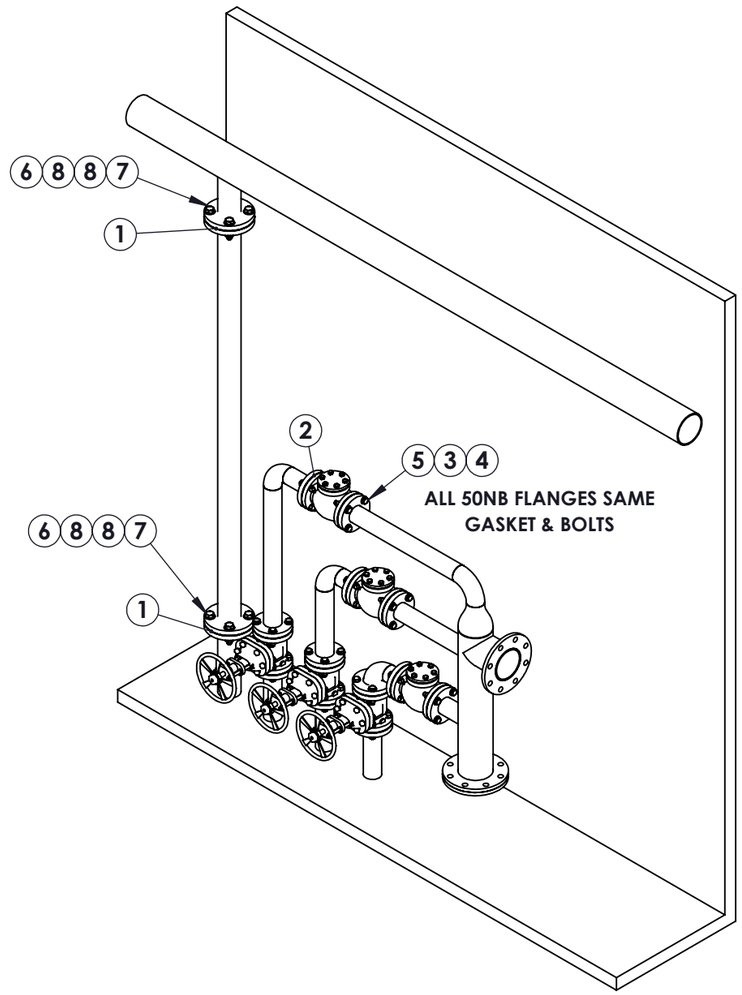

UNLESS OTHERWISE SPECIFIED: TOLERANCES: MACHINE + / - 0.25mm FABRICATION + / - 1.0 mm

DIMENSIONS IN MILLIMETRES

THIS DRAWING IS THE PROPERTY OF MECHANICAL ENGINEERING & CAD SERVICES (MECS) Pty Ltd & MUST NOT BE MANUFACTURED FROM,COPIED OR TRANSMITTED TO A THIRD PARTY WITHOUT THE PRIOR APPROVAL FROM MECHANICAL ENGINEERING & CAD SERVICES (MECS) Pty Ltd

MECS
Mechanical Engineering & CAD Services
11 Campbell Place WAGGA NSW 2650
Ph: - 0409 985 816
Email: nick@mecservices.com.au

THIRD ANGLE PROJECTION

CLIENT
RODDY ENGINEERING
14 Waratah St TUMUT NSW 2720
Ph: - 02 6947 4039
Email: roddyeng.com.au

TITLE: TURBINE COOLING WATER PIPEWORK

DWG NO. 3974-13-40 REV A3

DRAWN N DE BRUYN DATE 17/12/2025 SCALE:1:20 SHEET 1 OF 1