ITEM	DRAWING No	DESCRIPTION	QTY.	MASS (kg)
1	OEM-SS-1210-2-12PR	SWAGELOK S/S POSITIONABLE MALE ELBOW 3/4 BSP x 3/4 TUBE	5	0.35
2	OEM-SS-1210-1-12RT	SWAGELOK S/S MALE CONNECTOR 3/4 BSPT x 3/4 TUBE	5	0.15
3	OEM-SS-12-TA-1-12RS	SWAGELOK S/S MALE TUBE ADAPTOR 3/4 BSPP x 3/4 TUBE	3	0.15
4	OEM-2935-SHL	3/4" BSPT GLV-CL800-316 VALVE	1	
5	OEM-2928-SHL	3/4" BSPT GLV-CL800-316 VALVE	1	
6	OEM-2927-SHL	3/4" BSPT GLV-CL800-316 VALVE	1	
7	OEM-2926-SHL	3/4" BSPT GLV-CL800-316 VALVE	2	
8	OEM SS-1211-PC	SWAGELOK PORT CONNECTOR 3/4" TUBE	1	0.04

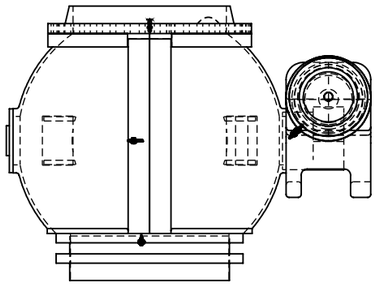

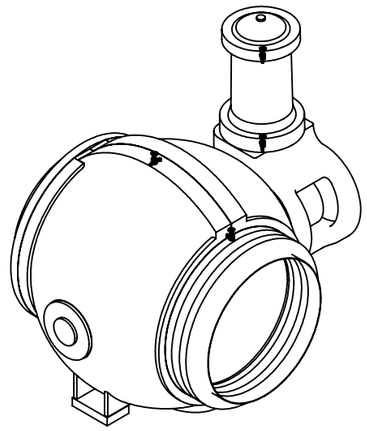

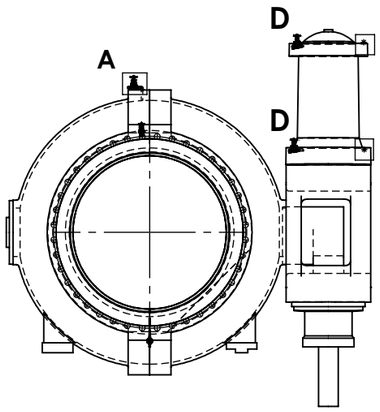

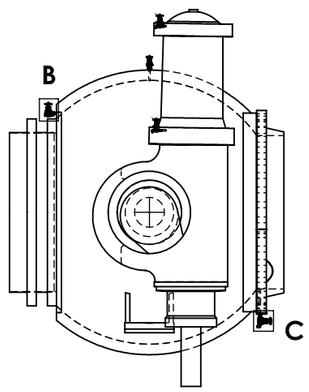

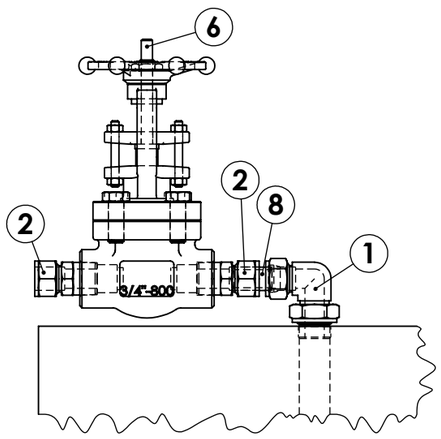

VALVE 2927

DETAIL A
SCALE 1 : 5

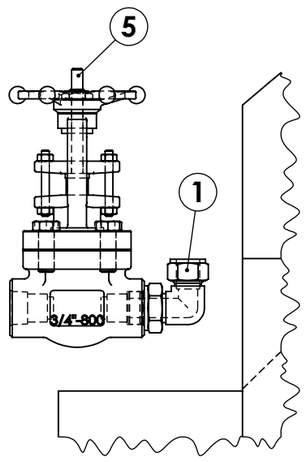

VALVE 2928

DETAIL B
SCALE 1 : 5

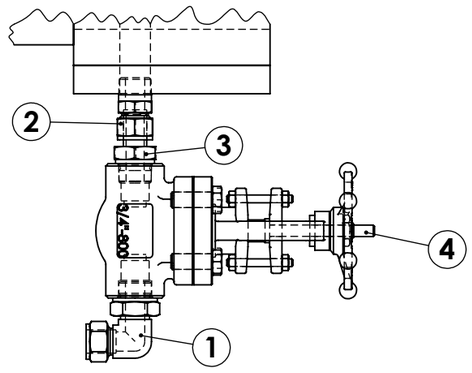

VALVE 2935

DETAIL C
SCALE 1 : 5

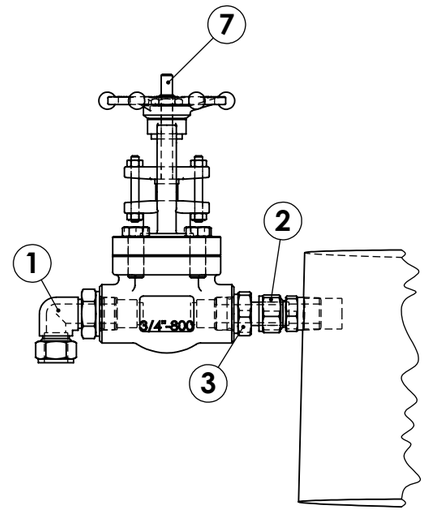

VALVE 2926A & 2926B

DETAIL D
SCALE 1 : 5

UNLESS OTHERWISE SPECIFIED: TOLERANCES: MACHINE + / - 0.25mm FABRICATION + / - 1.0 mm

DIMENSIONS IN MILLIMETRES

THIS DRAWING IS THE PROPERTY OF MECHANICAL ENGINEERING & CAD SERVICES (MECS) Pty Ltd & MUST NOT BE MANUFACTURED FROM,COPIED OR TRANSMITTED TO A THIRD PARTY WITHOUT THE PRIOR APPROVAL FROM MECHANICAL ENGINEERING & CAD SERVICES (MECS) Pty Ltd

MECS
Mechanical Engineering & CAD Services
11 Campbell Place WAGGA NSW 2650
Ph: - 0409 985 816
Email: nick@mecservices.com.au

THIRD ANGLE PROJECTION

CLIENT
RODDY ENGINEERING
14 Waratah St TUMUT NSW 2720
Ph: - 02 6947 4039
Email: roddyeng.com.au

TITLE: UNIT 13 MIV BLEED VALVES - 2926A,2926B,2927,2928,2935

DWG NO. 3974-13-42 REV A3

DRAWN N DE BRUYN DATE 10/02/2026 SCALE:1:100 SHEET 1 OF 1