ITEM	DRAWING No	DESCRIPTION	QTY.	MASS (kg)
1	OEM-80x50-CR-40-316	80NB x 50NB CONCENTRIC REDUCER SHED 40 316L S/S	1	0.9
2	OEM-80NBx40-T-40-316L	80NB x 40NB BUTT WELD REDUCING TEE 316L S/S	1	2.31
3	OEM-80-40-316-C	80NB BUTTWELD CAP SHED 40 316L S/S	1	0.72
4	OEM-50-LRx79-40-316L	50NB LONG RADIUS BEND SHED 40 TRIMMED TO 79 DEGRESS 316L S/S	1	0.58
5	OEM-50-LRx30-40-316L	50NB LONG RADIUS BEND SHED 40 TRIMMED TO 30 DEGRESS 316L S/S	1	0.22
6	OEM-50-150-SO-316L	50NB ANSI 150 Lb SLIP ON FLANGE 316L S/S	1	2.16
7	OEM-40-JIS5K-P-316L	40NB PLATE FLANGE JIS5K 316L S/S	1	1
8	OEM-40-150-SO-316L	40NB FLANGE ANSI 150 LB SLIP ON 316L S/S	1	1.3
9	3435-50-012-05	PIPE LABEL W-012	1	0.01
10	3435-50-012-04	50NB SHED 40 316 S/S PIPE	1	0.22
11	3435-50-012-03	50NB SHED 40 PIPE 316L S/S	1	2.50
12	3435-50-012-02	40NB SHED 40 PIPE 316L S/S	1	0.39

RED EYE QR CODE AREA

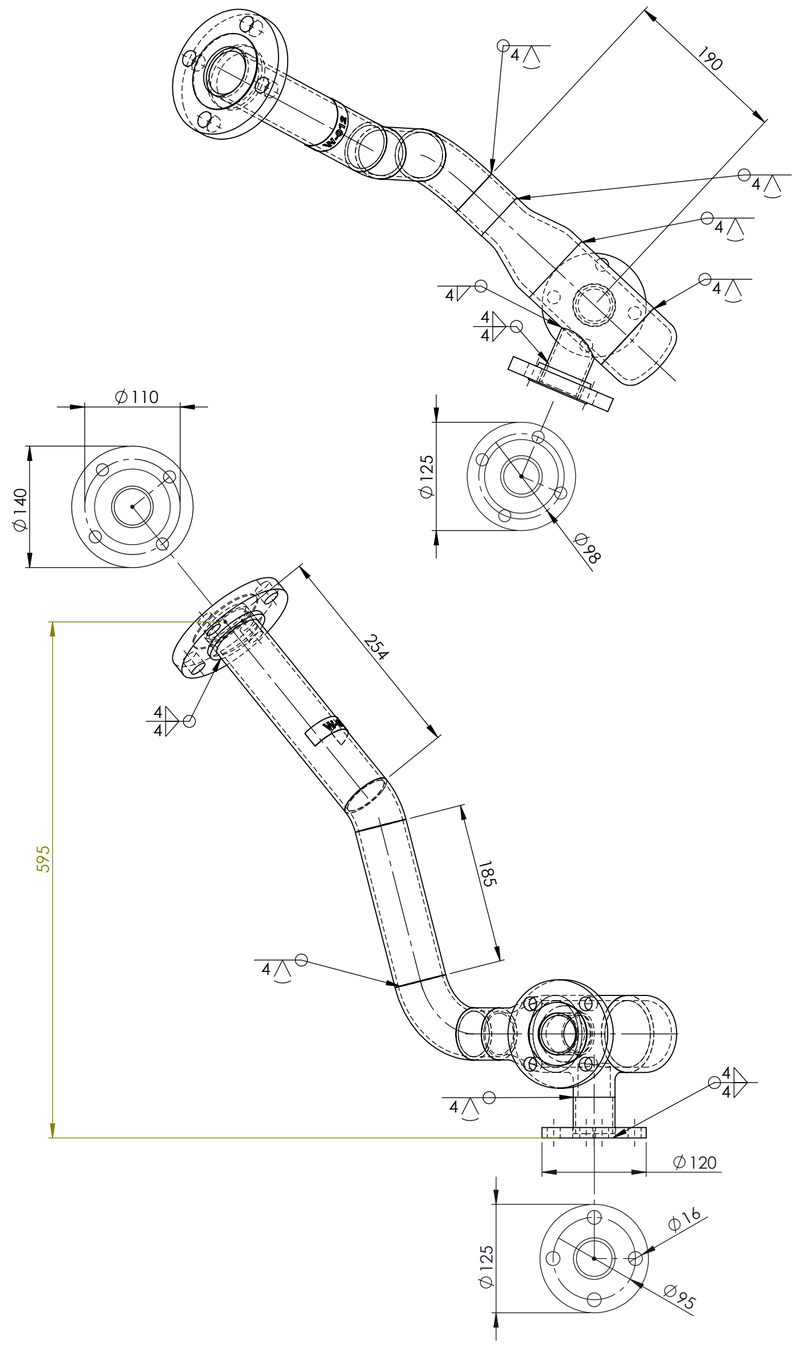

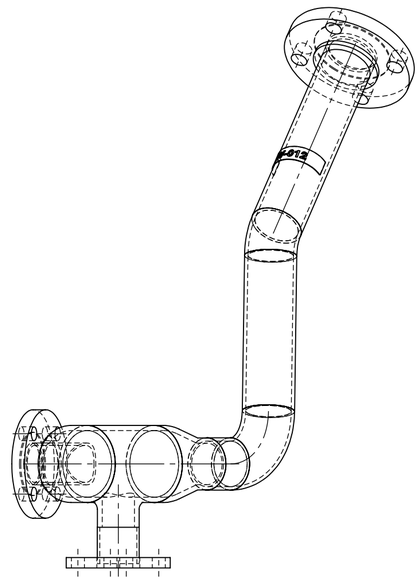

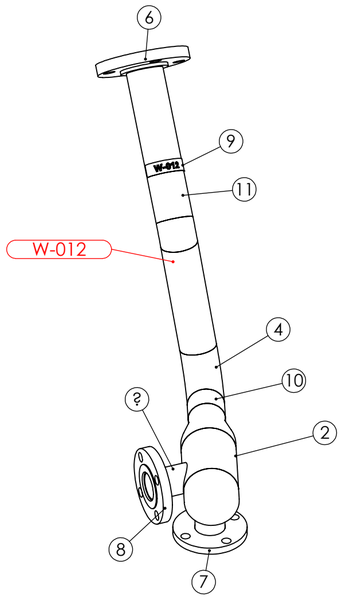

PIPE LABEL - W-012

PIPEWORK MANUFACTURED OF A JIG - FLANGES AS PER DRAWING
DIMENSIONS ARE APPROXIMATE

ISSUED FOR CONSTRUCTION 2/2/26

PIPE W-012 ASSEMBLY WEIGHT - 11.42 kg

REV	NAME & DATE	DESCRIPTION

UNLESS OTHERWISE SPECIFIED:
TOLERANCES: MACHINE + / - 0.25mm
FABRICATION + / - 1.0 mm

THIS DRG SUPPLIED BY
RODDY ENGINEERING
14 Waratah St, TUMUT NSW 2720
Ph: 02 6947 4039

DRAWING No. 3974-13-50-012
REV:

DRAWN N DE BRUYN 19/11/2025
DRAWING CHECKED
DESIGNED
DESIGN CHECKED
SCALE 1:5
WORK ORDER No
APPROVED
SECTION No/KKS
A2 SHEET SIZE

snowyhydro LIMITED

M2 POWER STATION
TURBINE COOLING UNIT 13
W-012 PIPE ASSEMBLY

SMA-DRG-NO

REV

SHEET 1 OF 1