ITEM	DRAWING No	DESCRIPTION	QTY.	MASS (kg)
1	OEM-40-150-SO-316L	40NB FLANGE ANSI 150 LB SLIP ON 316L S/S	2	1.3
2	3435-50-014-03	PIPE LABEL W-014	1	0.01
3	3435-50-013-04	40NB SHED 40 316L S/S 135 BEND	2	2.14
4	3435-50-013-03	40NB SHED 40 316 S/S PIPE 1250 R	1	4.05
5	3435-50-013-02	40NB SHED 40 316 S/S PIPE 1410 R	1	4.57

RED EYE QR CODE AREA

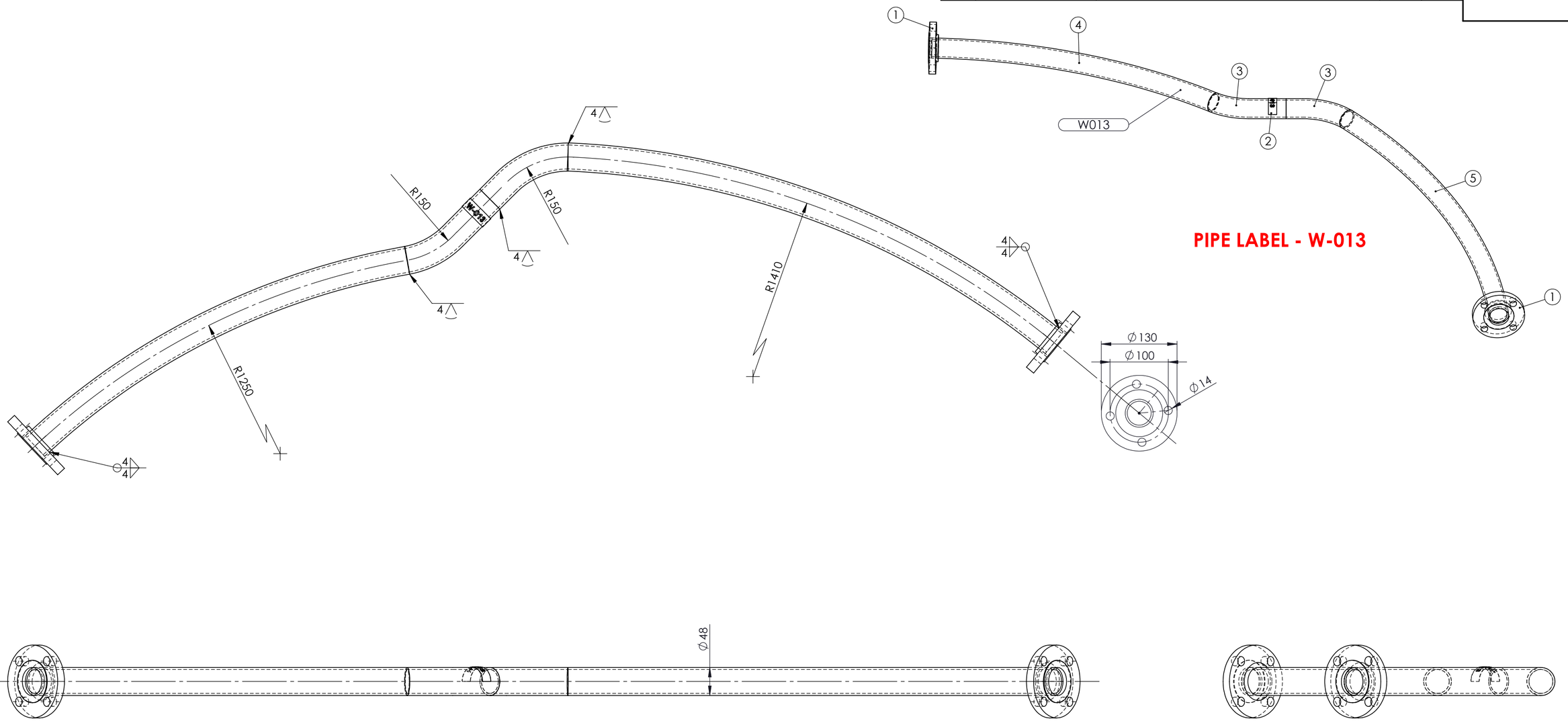

PIPEWORK TO BE TACKED UP ON SITE - FLANGES AS PER DRAWING
DIMENSIONS ARE APPROXAMATE - IF MAJOR DISCREPENCIES ADVISE SUPERVISOR

ISSUED FOR CONSTRUCTION 2/2/26

PIPE W-013 ASSEMBLY WEIGHT - 10.80 kg

REV	NAME & DATE	DESCRIPTION

UNLESS OTHERWISE SPECIFIED:
TOLERANCES: MACHINE + / - 0.25mm
FABRICATION + / - 1.0 mm

THIS DRG SUPPLIED BY
RODDY ENGINEERING
14 Waratah St, TUMUT NSW 2720
Ph: 02 6947 4039

DRAWING No. 3974-13-50-013
REV:

DRAWN N DE BRUYN 19/11/2025
DRAWING CHECKED
DESIGNED
DESIGN CHECKED
SCALE 1:5
APPROVED
WORK ORDER No
SECTION No/KKS
A2 SHEET SIZE

snowyhydro LIMITED

M2 POWER STATION
UNIT 13 TURBINE COOLING WATER
PIPE W-013 ASSEMBLY

SMA-DRG-NO

REV

SHEET 1 OF 1