ITEM	DRAWING No	DESCRIPTION	QTY.	MASS (kg)
1	OEM-50-LRx30-40-316L	50NB LONG RADIUS BEND SHED 40 TRIMMED TO 30 DEGRESS 316L S/S	1	0.22
2	OEM-50NB-T-40-316L	50NB BUTT WELD TEE SHED 40 316L S/S	1	0.8
3	OEM-50-150-SO-316L	50NB ANSI 150 Lb SLIP ON FLANGE 316L S/S	3	2.16
4	3435-50-016-05	40NB SHED 40 316L S/S	1	0.38
5	3435-50-016-04	PIPE LABEL W-016	1	0.01
6	3435-50-016-03	50NB SHED 40 316L S/S 90 BEND	1	4.73
7	3435-50-016-02	50NB SHED 40 316L S/S 90 BEND	1	3.22

RED EYE QR CODE AREA

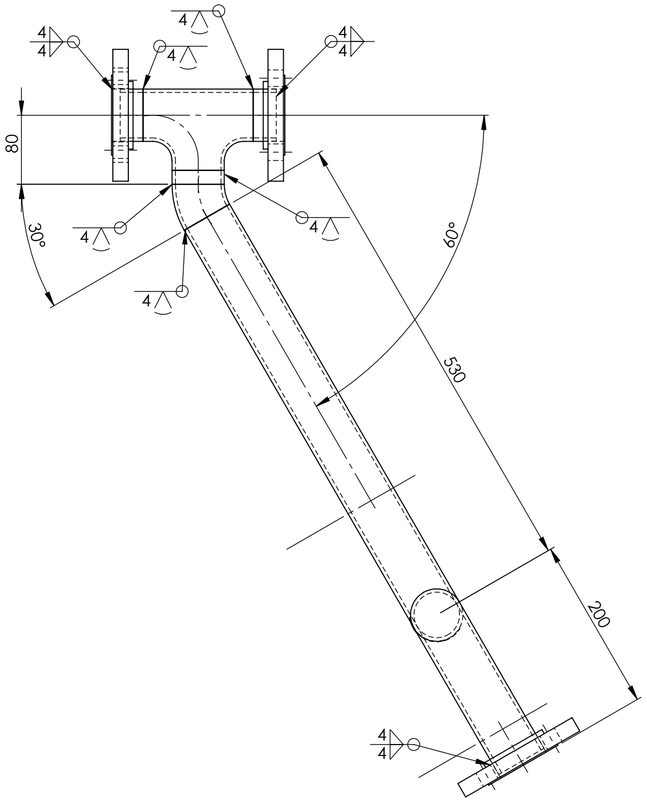

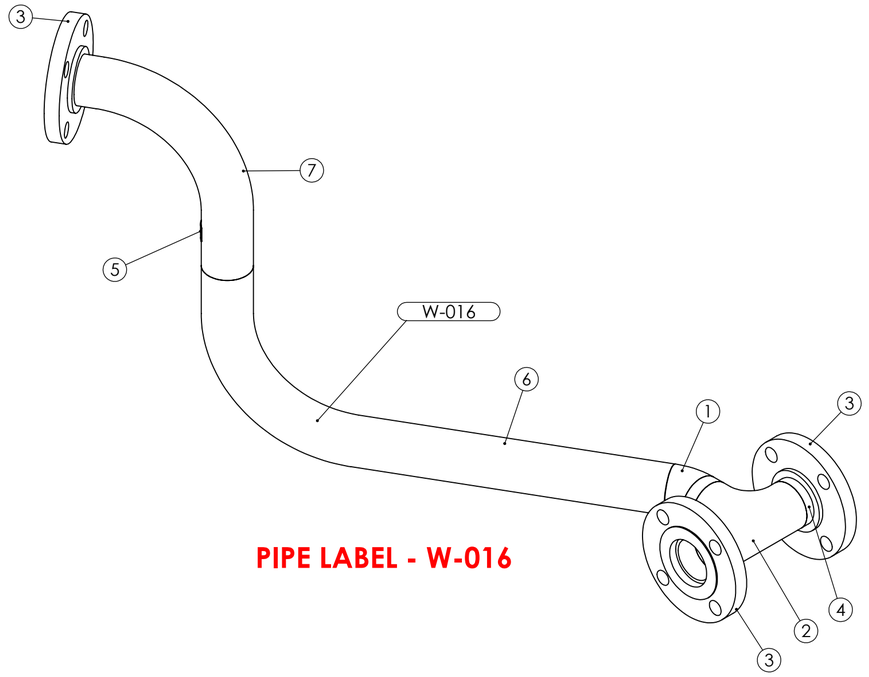

PIPE LABEL - W-016

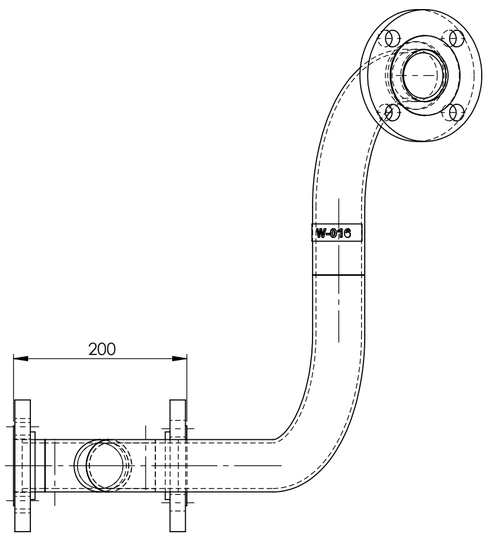

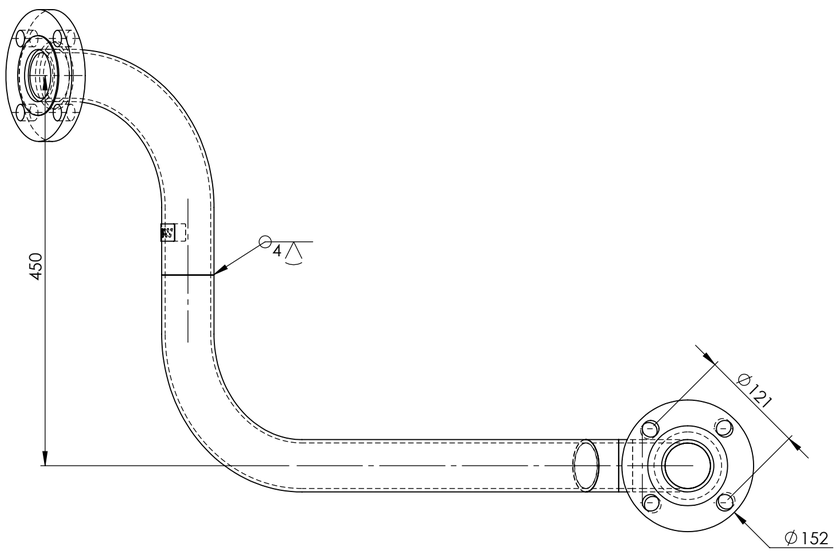

ISSUED FOR CONSTRUCTION 2/2/26

PIPE W-016 ASSEMBLY WEIGHT - 13.71 kg

ALL WELDS - 4 CFW UNLESS NOTED OTHERWISE

PIPEWORK MANUFACTURED OF A JIG - FLANGES AS PER DRAWING
DIMENSIONS ARE APPROXIMATE

REV	NAME & DATE	DESCRIPTION

UNLESS OTHERWISE SPECIFIED:
TOLERANCES: MACHINE + / - 0.25mm
FABRICATION + / - 1.0 mm

THIS DRG SUPPLIED BY
RODDY ENGINEERING
14 Waratah St, TUMUT NSW 2720
Ph: 02 6947 4039

DRAWING No. 3974-13-50-016
REV:

DRAWN N DE BRUYN 19/11/2025
DRAWING CHECKED
DESIGNED
DESIGN CHECKED
SCALE 1:5
APPROVED
WORK ORDER No
SECTION No/KKS
A2 SHEET SIZE

snowyhydro LIMITED

M2 POWER STATION UNIT 13
UNIT 11 TURBINE COOLING WATER
PIPE W-016 ASSEMBLY

SMA-DRG-NO

REV

SHEET 1 OF 1