ITEM	DRAWING No	DESCRIPTION	QTY.	MASS (kg)
1	OEM-65NB-T-40-316L	65NB BUTT WELD TEE SHED 40 316L S/S	1	1.6149
2	OEM-65NB-JIS5-P-316L	65NB PLATE FLANGE JIS5 316L S/S	1	2
3	OEM-63x50-CR-40-316	63NB x 50NB CONCENTRIC REDUCER SHED 40 316L S/S	1	0.6
4	OEM-63x40-CR-40-316	63NB x 40NB CONCENTRIC REDUCER SHED 40 316L S/S	1	0.6
5	OEM-50-LR-40-316L	50NB LONG RADIUS BEND SHED 40 316L S/S	2	0.66
6	OEM-50NB-PN6-SO-316L	50NB EN1092 PN6 SLIP ON FLANGE 316L S/S	1	1.42
7	OEM-40x25-CR-40-316	40NB x 25NB CONCENTRIC REDUCER SHED 40 316L S/S	1	0.2
8	OEM-40-LR-40-316L	40NB LONG RADIUS BEND 316L S/S SHED 40	1	0.37
9	OEM-25-150-SO-316L	25NB - 150 Lb ANSI SLIP ON FLANGE 316L S/S	1	0.84
10	OEM-15-150-316-S	1/2" BSP 150lb 316 S/S SOCKET	1	0.08
11	3435-50-019-02	PIPE LABEL W-019	1	0.01
12	3435-019-01	50NB SHED 40 PIPE 316L S/S	1	1.23

RED EYE QR CODE AREA

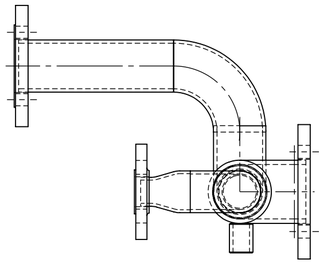

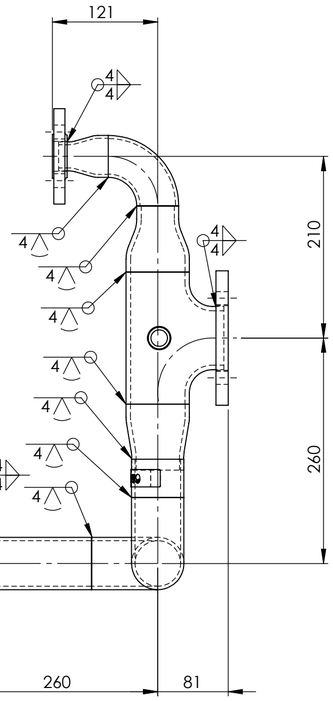

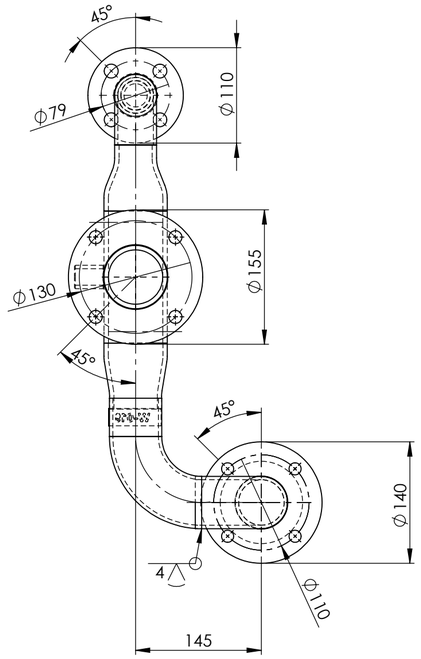

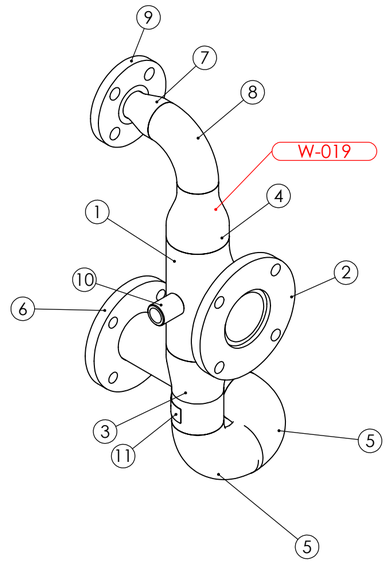

PIPE LABEL - W-019

ISSUED FOR CONSTRUCTION 2/2/26

ALL WELDS - 4CFW UNLESS NOTED OTHERWISE

PIPEWORK MANUFACTURED ON SITE - FLANGES AS PER DRAWING
DIMENSIONS ARE APPROXIMATE

PIPE W-019 ASSEMBLY WEIGHT - 9.75 kg

REV	NAME & DATE	DESCRIPTION

UNLESS OTHERWISE SPECIFIED:
TOLERANCES: MACHINE + / - 0.25mm
FABRICATION + / - 1.0 mm

THIS DRG SUPPLIED BY
RODDY ENGINEERING
14 Waratah St, TUMUT NSW 2720
Ph: 02 6947 4039

DRAWING No. 3974-13-50-019
REV:

DRAWN N DE BRUYN 19/11/2025
DRAWING CHECKED
DESIGNED
DESIGN CHECKED
SCALE 1:5
WORK ORDER No
APPROVED
SECTION No/KKS
A2 SHEET SIZE

snowyhydro LIMITED

M2 POWER STAION
TURBINE COOLING WATER UNIT 13
W019 PIPE ASSEMBLY

SMA-DRG-NO

REV

SHEET 1 OF 1