ITEM	DRAWING No	DESCRIPTION	QTY.	MASS (kg)
1	OEM-50-150-SO-316L	50NB ANSI 150 Lb SLIP ON FLANGE 316L S/S	1	2.16
2	OEM-50NB-JIS5-P-316L	50NB PLATE FLANGE JIS5 316L S/S	1	1
3	OEM-50-LR-40-316L	50NB LONG RADIUS BEND SHED 40 316L S/S	1	0.66
4	3435-50-022-04	50NB SHED 40 316 S/S PIPE	1	0.35
5	3435-50-022-03	PIPE LABEL W-022	1	0.01
6	3435-50-022-02	50NB SHED 40 316L S/S 125 BEND	1	3.02
7	3435-50-016-03	50NB SHED 40 316L S/S 90 BEND	1	4.73

RED EYE QR CODE AREA

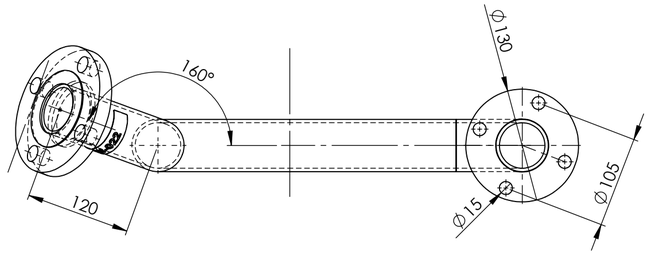

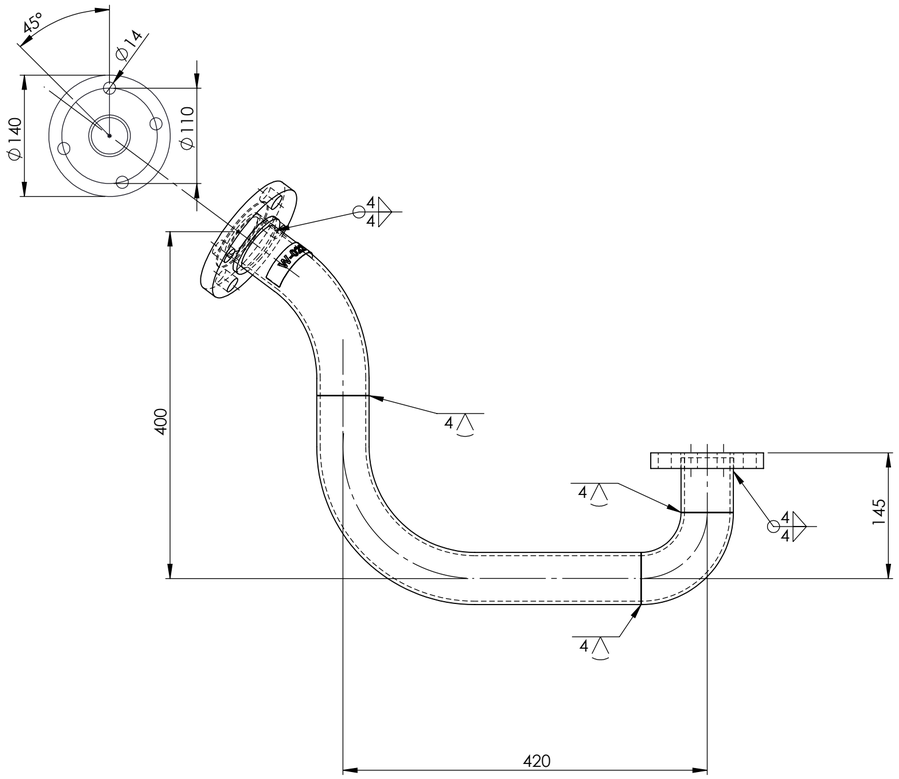

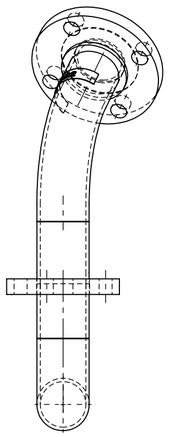

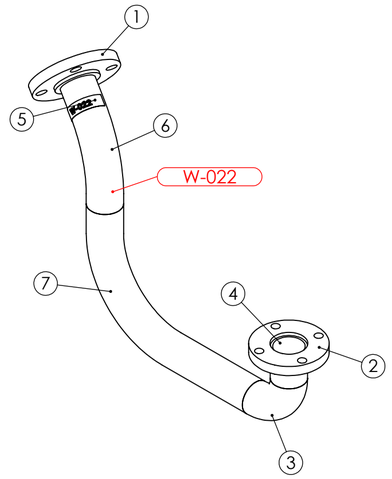

PIPE LABEL - W-022

ISSUED FOR CONSTRUCTION 2/2/26

PIPEWORK MANUFACTURED OF A JIG - FLANGES AS PER DRAWING
DIMENSIONS ARE APPROXIMATE

PIPE W-022 ASSEMBLY WEIGHT - 8.57 kg

REV	NAME & DATE	DESCRIPTION

UNLESS OTHERWISE SPECIFIED:
TOLERANCES: MACHINE + / - 0.25mm
FABRICATION + / - 1.0 mm

THIS DRG SUPPLIED BY
RODDY ENGINEERING
14 Waratah St, TUMUT NSW 2720
Ph: 02 6947 4039

DRAWING No. 3974-13-50-022
REV:

DRAWN N DE BRUYN 19/11/2025
DRAWING CHECKED
DESIGNED
DESIGN CHECKED
SCALE 1:5
WORK ORDER No
APPROVED
SECTION No/KKS
A2 SHEET SIZE

snowyhydro LIMITED

M2 POWER STATION
UNIT 13 TURBINE COOLING WATER
W022 PIPE ASSEMBLY

SMA-DRG-NO
REV
SHEET 1 OF 1