ITEM	DRAWING No	DESCRIPTION	QTY.	MASS (kg)
1	OEM-25-LR-40-316L	25NB SHED 40 LONG RADIUS BEND 316L S/S	1	
2	OEM-25-150-SO-316L	25NB - 150 Lb ANSI SLIP ON FLANGE 316L S/S	2	0.84
3	3435-50-210-04	PIPE LABEL W-210	1	0.01
4	3435-50-023-01	25NB SHED 40 316L S/S PIPE	1	0.57

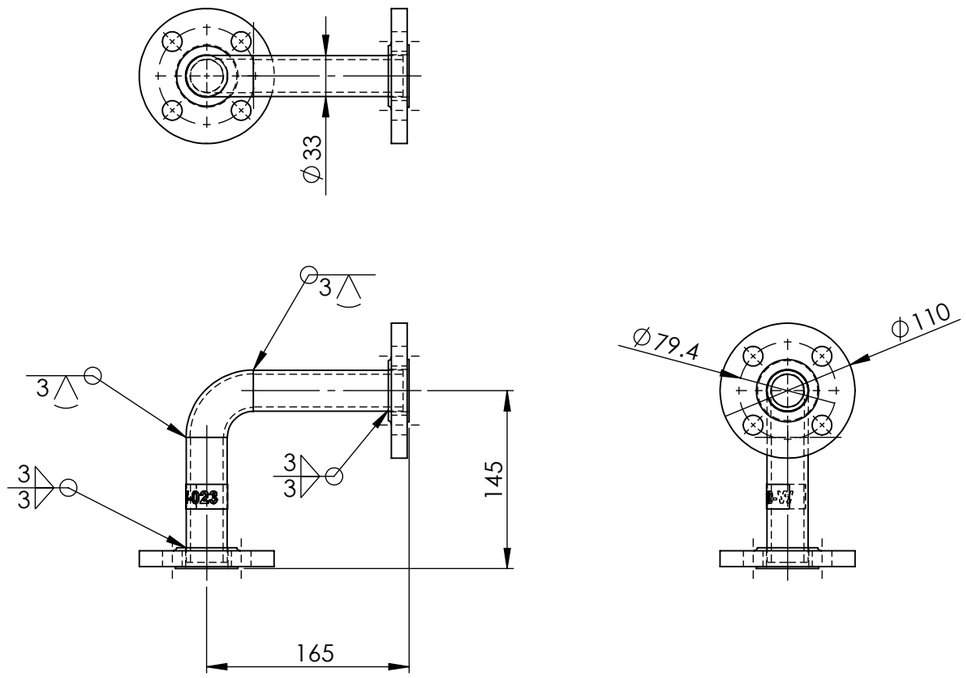

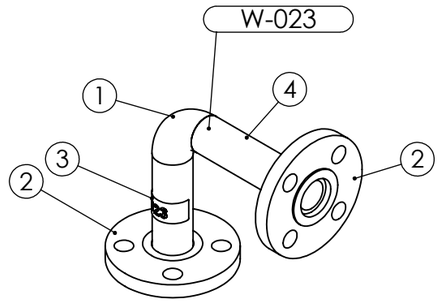

PIPE LABEL - W-023

ISSUED FOR CONSTRUCTION 2/2/26
REQUIRES PLANNING & SITE INTERACTION

PIPEWORK MANUFACTURED ON SITE - FLANGES AS PER DRAWING
DIMENSIONS ARE APPROXIMATE

PIPE W-023 ASSEMBLY WEIGHT - 2.40 kg

REV	NAME & DATE	DESCRIPTION

UNLESS OTHERWISE SPECIFIED:
TOLERANCES: MACHINE + / - 0.25mm
FABRICATION + / - 1.0 mm

THIS DRG SUPPLIED BY
RODDY ENGINEERING
14 Waratah St, TUMUT NSW 2720
Ph: 02 6947 4039

DRAWING No. 3974-13-50-023
REV:

DRAWN N DE BRUYN 19/11/2025
DRAWING CHECKED
DESIGNED
DESIGN CHECKED
SCALE 1:5
APPROVED
WORK ORDER No
SECTION No/KKS
A3 SHEET SIZE

snowyhydro LIMITED

M2 POWER STATION
TURBINE COOLING WATER UNIT 13
PIPE W023 ASSEMBLY

SMA-DRG-NO

REV

SHEET 1 OF 1

0,0