ITEM	DRAWING No	DESCRIPTION	QTY.	MASS (kg)
1	OEM-25-LR-40-316L	25NB SHED 40 LONG RADIUS BEND 316L S/S	2	
2	OEM-25-150-SO-316L	25NB - 150 Lb ANSI SLIP ON FLANGE 316L S/S	2	0.84
3	3435-50-025-03	PIPE LABEL W-025	1	0.01
4	3435-50-025-02	25NB SHED 40 316L S/S PIPE	1	2.68

RED EYE QR CODE AREA

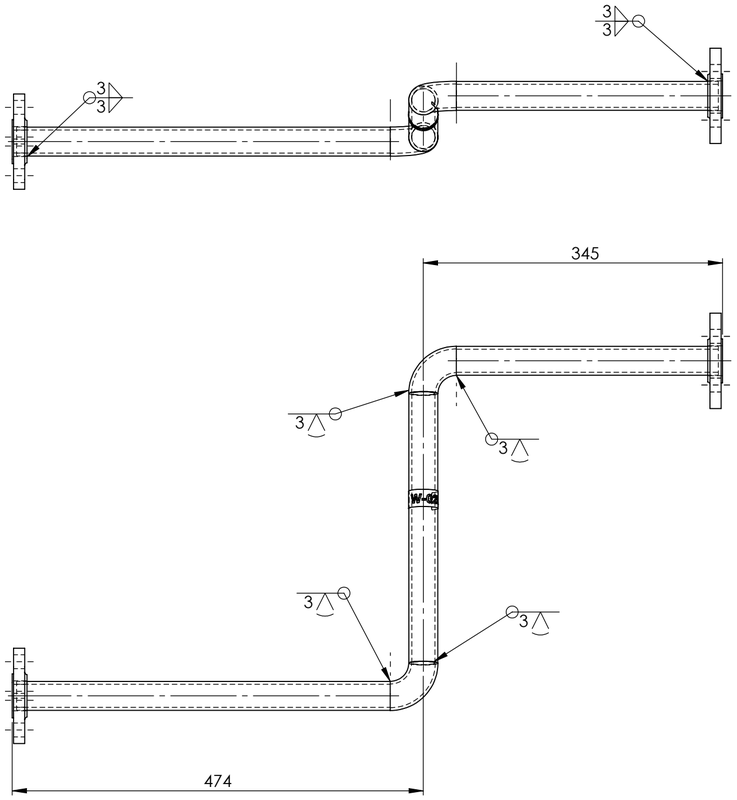

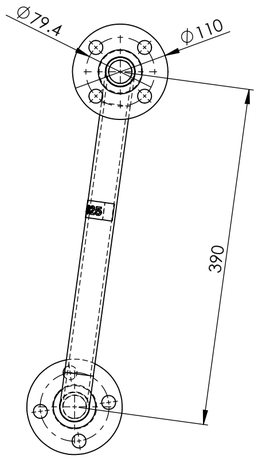

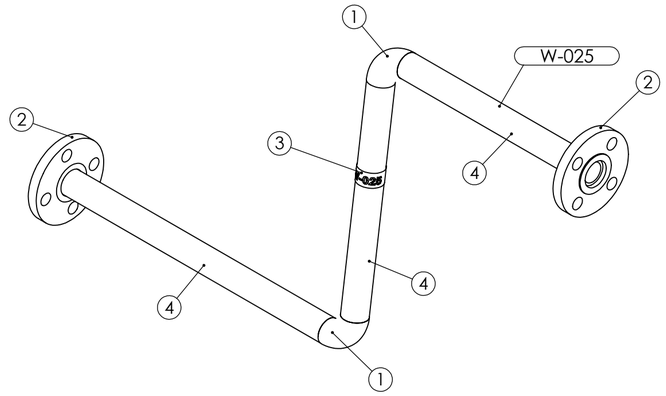

PIPE LABEL - W-025

ISSUED FOR CONSTRUCTION 2/2/26
REQUIRES PLANNING & SITE INTERACTION

PIPEWORK MANUFACTURED ON SITE - FLANGES AS PER DRAWING
DIMENSIONS ARE APPROXIMATE

PIPE W-025 ASSEMBLY WEIGHT - 4.66 kg

REV	NAME & DATE	DESCRIPTION

UNLESS OTHERWISE SPECIFIED:
TOLERANCES: MACHINE + / - 0.25mm
FABRICATION + / - 1.0 mm

THIS DRG SUPPLIED BY
RODDY ENGINEERING
14 Waratah St, TUMUT NSW 2720
Ph: 02 6947 4039

DRAWN: N DE BRUYN 19/11/2025
DRAWING CHECKED
DESIGNED
DESIGN CHECKED
SCALE 1:5
APPROVED
WORK ORDER No
SECTION No/KKS
A2 SHEET SIZE

snowyhydro LIMITED

M2 POWER STATION
TURBINE COOLING WATER UNIT 13
PIPE W025 ASSEMBLY

DRAWING No. 3974-13-50-025
REV:

SMA-DRG-NO

REV

SHEET 1 OF 1

0,0