ITEM	DRAWING No	DESCRIPTION	QTY.	MASS (kg)
1	OEM-25-T-40-316L	25NB BUTT WELD TEE SHED 40 316 S/S	3	
2	OEM-25-LR-40-316L	25NB SHED 40 LONG RADIUS BEND 316L S/S	1	
3	OEM-25-150-SO-316L	25NB - 150 Lb ANSI SLIP ON FLANGE 316L S/S	1	0.84
4	OEM-20-150-316-S	3/4 " BSP 150lb 316 S/S SOCKET	4	0.18
5	3435-50-026-03	PIPE LABEL W-026	1	0.01
6	3435-50-026-01	25NB SHED 40 316L S/S PIPE BEND	1	2.70

RED EYE QR CODE AREA

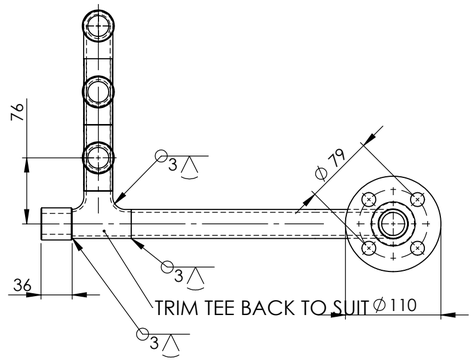

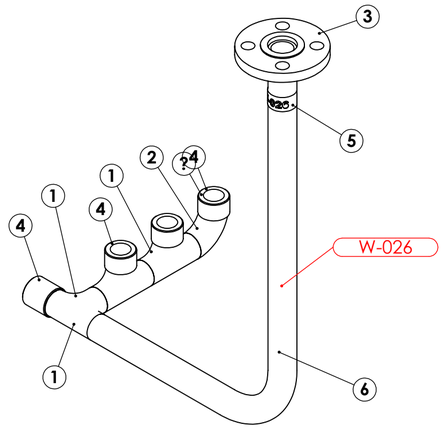

PIPE LABEL - W-026

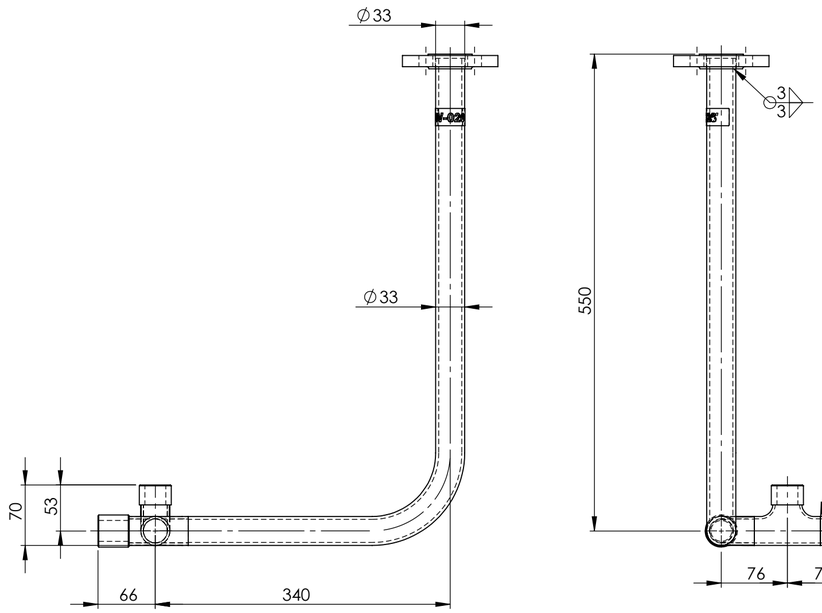

ISSUED FOR CONSTRUCTION 4/3/26

PIPEWORK MANUFACTURED OF A JIG - FLANGES AS PER DRAWING
DIMENSIONS ARE APPROXIMATE

PIPE W-026 ASSEMBLY WEIGHT - 4.11 kg

REV	NAME & DATE	DESCRIPTION

UNLESS OTHERWISE SPECIFIED:
TOLERANCES: MACHINE + / - 0.25mm
FABRICATION + / - 1.0 mm

THIS DRG SUPPLIED BY
RODDY ENGINEERING
14 Waratah St, TUMUT NSW 2720
Ph: 02 6947 4039

DRAWING No. 3974-13-50-026
REV:

DRAWN N DE BRUYN 3/03/2026
DRAWING CHECKED
DESIGNED
DESIGN CHECKED
SCALE 1:5
WORK ORDER No
APPROVED
SECTION No/KKS
A2 SHEET SIZE

snowyhydro LIMITED

M2 POWER STATION
TURBINE COOLING WATER UNIT 13
PIPE W026 ASSEMBLY

SMA-DRG-NO
REV
SHEET 1 OF 1