ITEM	DRAWING No	DESCRIPTION	QTY.	MASS (kg)
1	OEM-50NB-JIS5-P-316L	50NB PLATE FLANGE JIS5 316L S/S	1	1
2	OEM-50-LR-40-316L	50NB LONG RADIUS BEND SHED 40 316L S/S	2	0.66
3	OEM-50-150-SO-316L	50NB ANSI 150 Lb SLIP ON FLANGE 316L S/S	1	2.16
4	3435-50-210-03	50NB SHED 40 316 S/S PIPE	2	0.21
5	3435-50-210-02	50NB SHED 40 316L S/S 90 BEND	1	5.17
6	3435-50-210-04	PIPE LABEL W-210	1	0.01

RED EYE QR CODE AREA

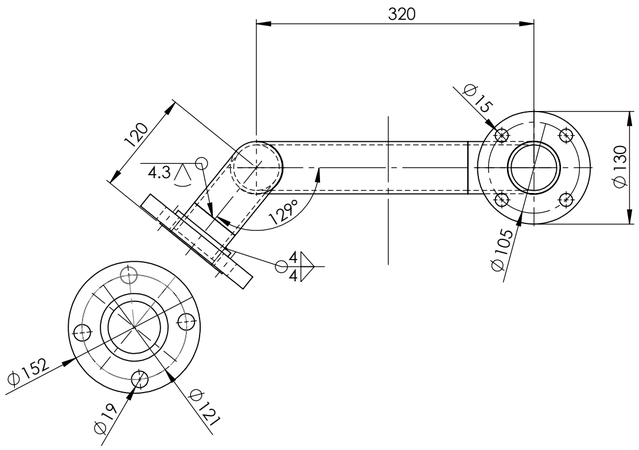

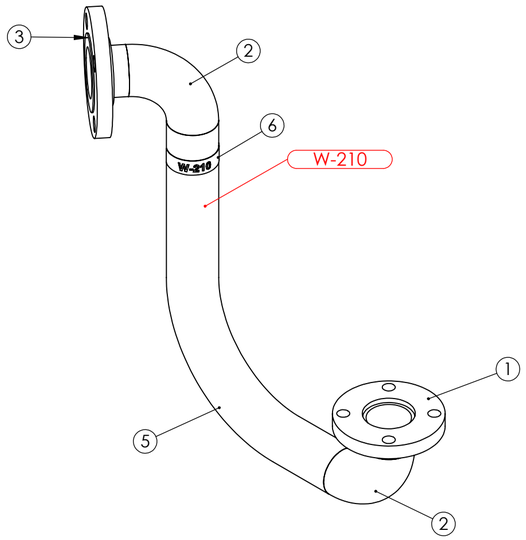

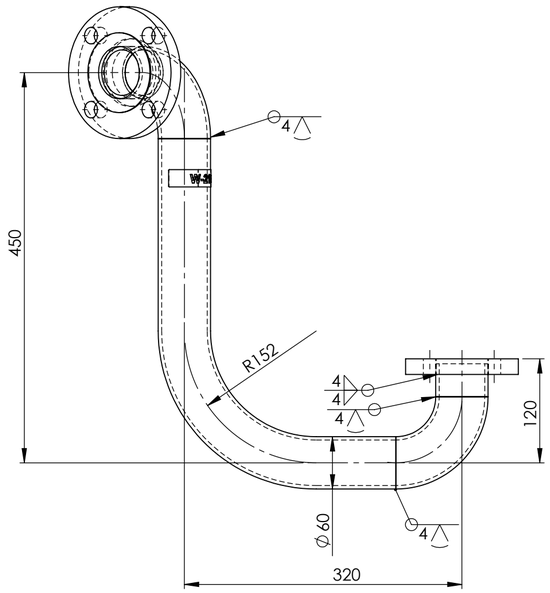

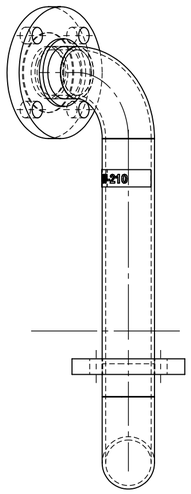

PIPE LABEL - W-210

ISSUED FOR CONSTRUCTION 2/2/26

PIPEWORK MANUFACTURED OF A JIG - FLANGES AS PER DRAWING
DIMENSIONS ARE APPROXIMATE

PIPE W-210 ASSEMBLY WEIGHT - 8.35 kg

REV	NAME & DATE	DESCRIPTION

UNLESS OTHERWISE SPECIFIED:
TOLERANCES: MACHINE + / - 0.25mm
FABRICATION + / - 1.0 mm

THIS DRG SUPPLIED BY
RODDY ENGINEERING
14 Waratah St, TUMUT NSW 2720
Ph: 02 6947 4039

DRAWING No. 3974-13-50-210
REV:

DRAWN N DE BRUYN 19/11/2025
DRAWING CHECKED
DESIGNED
DESIGN CHECKED
SCALE 1:5
APPROVED
WORK ORDER No
SECTION No/KKS
A2 SHEET SIZE

snowyhydro LIMITED

M2 POWER STATION
UNIT 13 TURBINE COOLING WATER
PIPE W-210 ASSEMBLY

SMA-DRG-NO

REV

SHEET 1 OF 1

0,0