ITEM		DESCRIPTION	QTY.	MASS (kg)
1	OEM-50-PN16-SO-316L	50NB FLANGE AS4087 PN16 SLIP ON 316L S/S	1	1
2	OEM-50-LRx25-40-316L	50NB LONG RADIUS BEND SHED 40 TRIMMED TO 25 DEGRESS 316L S/S	1	0.18
3	OEM-50-LR-40-316L	50NB LONG RADIUS BEND SHED 40 316L S/S	1	0.66
4	OEM-50-150-SO-316L	50NB ANSI 150 Lb SLIP ON FLANGE 316L S/S	1	2.16
5	OEM-15-150-316-S	1/2" BSP 150lb 316 S/S SOCKET	1	0.08
6	3435-50-211-03	PIPE LABEL W-211	1	0.01
7	3435-50-211-02	50NB SHED 40 316L S/S 90 BEND	1	7.58
8	3435-50-211-01	50NB SHED 40 PIPE 316L S?S	1	1.05

RED EYE QR CODE AREA

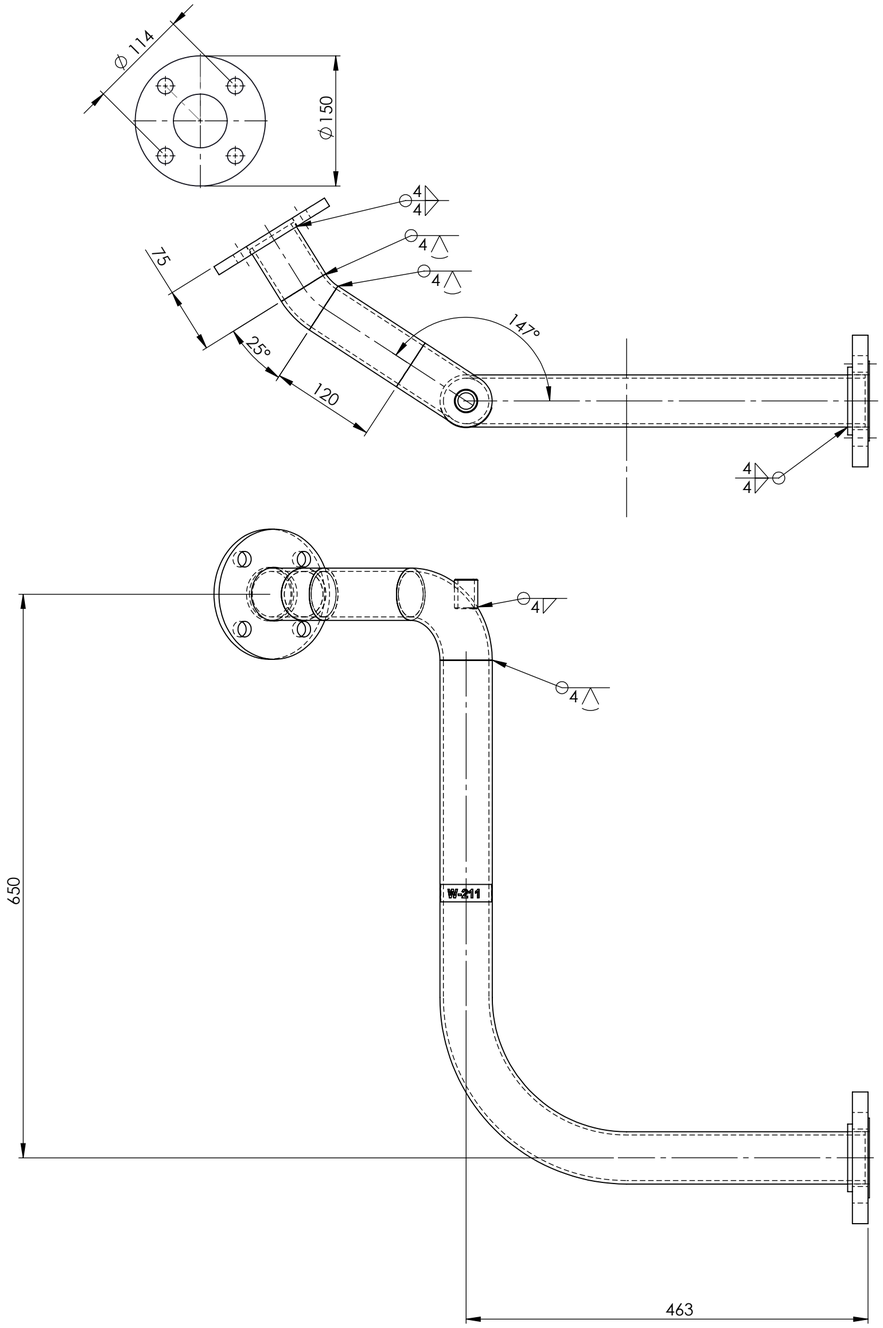

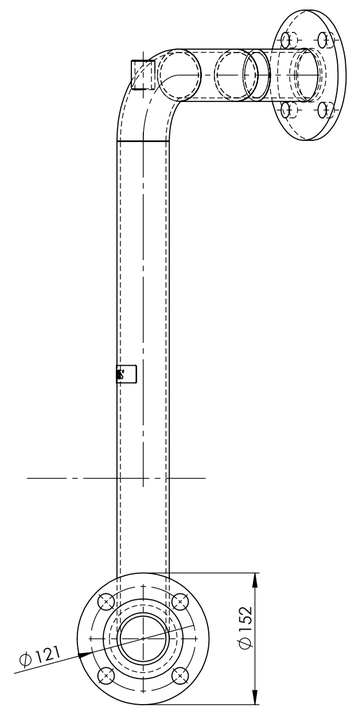

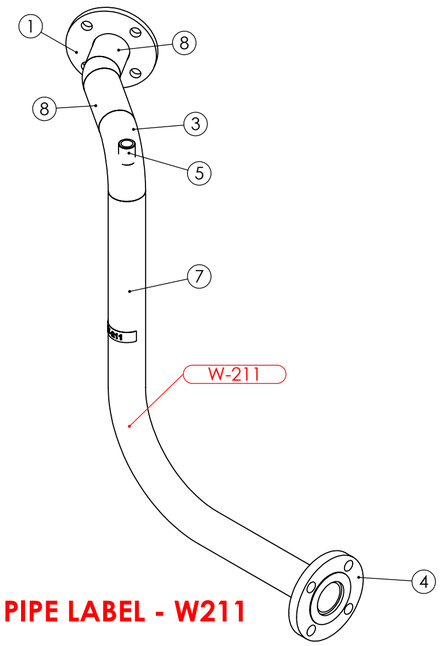

PIPE LABEL - W211

PIPEWORK ASSEMBLIED ON SITE - FLANGES AS PER DRAWING
DIMENSIONS ARE APPROXIMATE

PIPE W-211 ASSEMBLY WEIGHT - 10.62 kg

ISSUED FOR CONSTRUCTION 2/2/26
REQUIRES PLANNING & SITE INTERACTION

REV	NAME & DATE	DESCRIPTION

UNLESS OTHERWISE SPECIFIED:
TOLERANCES: MACHINE + / - 0.25mm
FABRICATION + / - 1.0 mm

THIS DRG SUPPLIED BY
RODDY ENGINEERING
14 Waratah St, TUMUT NSW 2720
Ph: 02 6947 4039

DRAWING No. 3974-13-50-211
REV:

DRAWN N DE BRUYN 19/11/2025
DRAWING CHECKED
DESIGNED
DESIGN CHECKED
SCALE 1:5
WORK ORDER No
APPROVED
SECTION No/KKS
A2 SHEET SIZE

snowyhydro LIMITED

M2 POWER STATION
UNIT 13 TURBINGE COOLING WATER
PIPE ASSEMBLY W-211

SMA-DRG-NO

REV

SHEET 1 OF 1

0,0