ITEM	DRAWING No	DESCRIPTION	QTY.	MASS (kg)
1	OEM-50-PN16-SO-316L	50NB FLANGE AS4087 PN16 SLIP ON 316L S/S	2	1
2	3435-50-213-01	50NB SHED 40 316 S/S PIPE	1	1.24

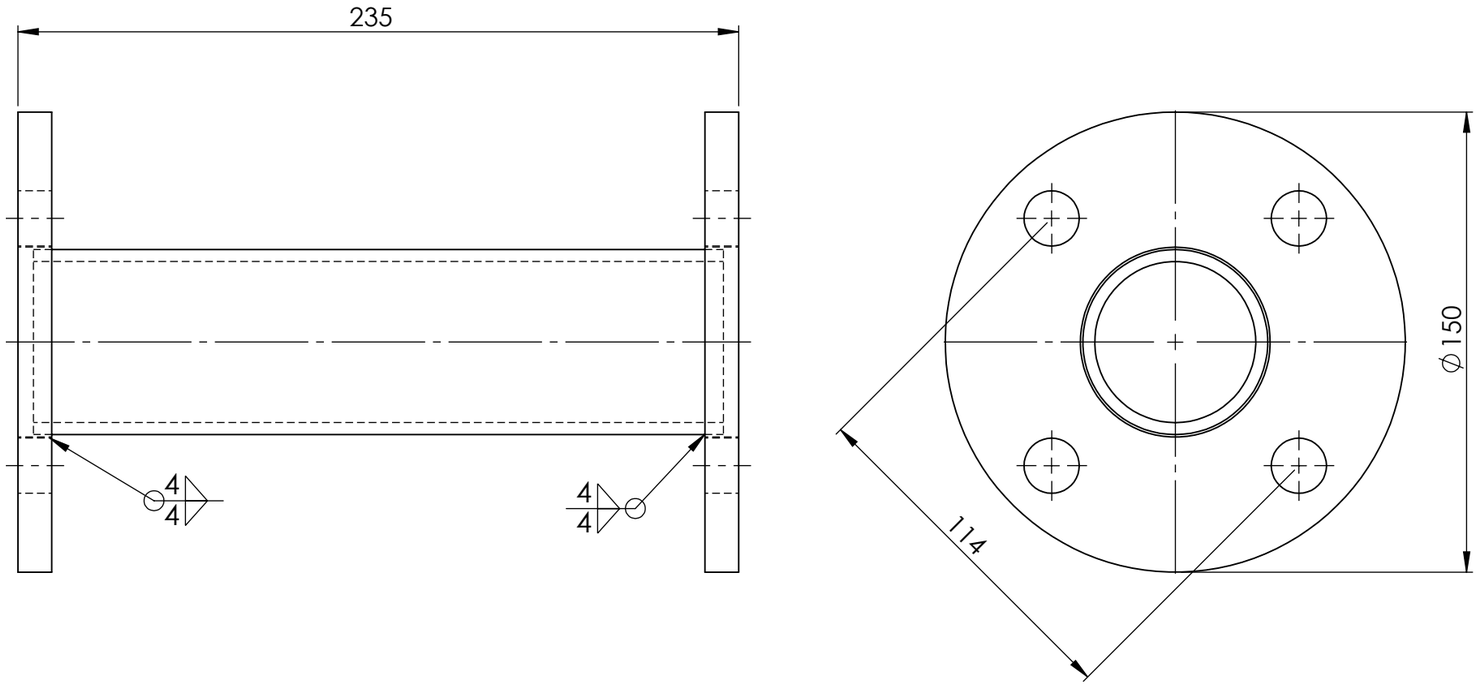

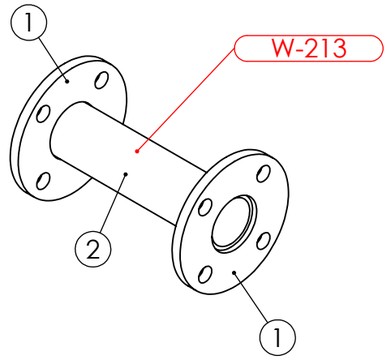

ISSUED FOR CONSTRUCTION 2/2/26

PIPE W-213 ASSEMBLY WEIGHT - 3.65 kg

REV	NAME & DATE	DESCRIPTION

UNLESS OTHERWISE SPECIFIED:
TOLERANCES: MACHINE + / - 0.25mm
FABRICATION + / - 1.0 mm

THIS DRG SUPPLIED BY
RODDY ENGINEERING
14 Waratah St, TUMUT NSW 2720
Ph: 02 6947 4039

DRAWING No. 3974-13-50-213
REV:

DRAWN N DE BRUYN 19/11/2025
DRAWING CHECKED
DESIGNED
DESIGN CHECKED
SCALE 1:2
WORK ORDER No
APPROVED
SECTION No/KKS
A3 SHEET SIZE

snowyhydro LIMITED

M2 POWER STATION
UNIT 13 TURBINE COOLING WATER
PIPE W- 213 ASSEMBLY

SMA-DRG-NO

REV

SHEET 1 OF 1

0,0