DIMENSIONS IN MILLIMETRES

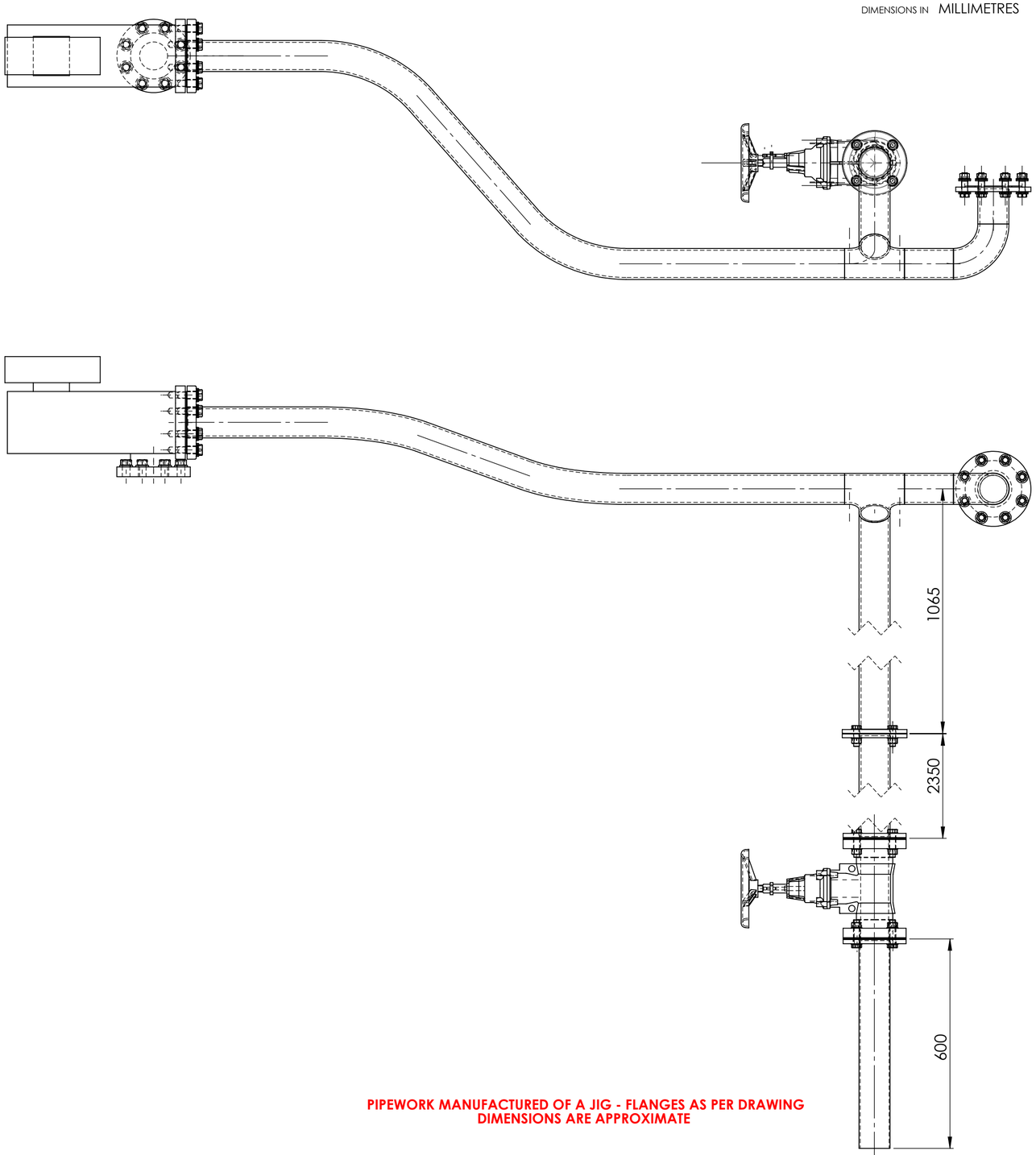

ITEM	DRAWING No	DESCRIPTION	QTY.	MASS (kg)
1	OEM-MY-16x28	16 DIA MYLAR INSULATION SLEEVE 28 LONG	8	0.00
2	OEM-MY-3_4x28	3/4" DIA MYLAR INSULATION SLEEVE 28 LONG	8	0.00
3	OEM-M2-MP-865	3"WATER PRESSURE NEEDLE RELIEF VALVE	1	19.72
4	OEM-2839-SHL	80NB VALVE 2839	1	29.35
5	OEM-100-E-3	100NB TABLE E 3.0mm C-4430 GASKET	1	0
6	OEM-80NB-JIS30K-3	80NB JIS30K 3.0mm C-4430 GASKET	1	0.1
7	OEM-80NB-JIS5K-15	80NB JIS5K 1.5mm C-4400 GASKET	3	0.1
8	13-2839-A-2	UNIT 13 VALVE 2839 UPSTREAM PIPE 2	1	53.57
9	13-2839-A-1	UNIT 13 VALVE 2839 UPSTREAM PIPE 1	1	30.49
10	13-2839-1	UNIT 13 VALVE 2839-1 DOWN STREAM PIPE	1	5.66
11		3/4" G10 EXPOY FLAT WASHER	8	
12		3/4" FLAT WASHER HIGH TENSILE ZP (37x21x4)	16	
13		3/4" UNC HEX NUT ZINC PLATED	8	0.1
14		3/4"UNC x 2 1/4" HEX BOLT ZP G8	8	
15		M16 THICK FLAT WASHER 304 S/S (30x17.5x3)	16	0.02
16		M16x2.0 HEX NUT 304 S/S	20	0.06
17		M16x2.0 x 50 HEX BOLT 304 S/S	4	0.1
18		M16x2.0 x 60 HEX BOLT 304 S/S	8	0.1
19		M16x2.0 x 70 HEX BOLT 304 S/S	8	0.2
20		M16 FLAT WASHER 304 S/S (30x17.5x1.5)	24	0.01
21		M16 G10 EXPOY FLAT WASHER	16	0.02

RED EYE QR CODE AREA

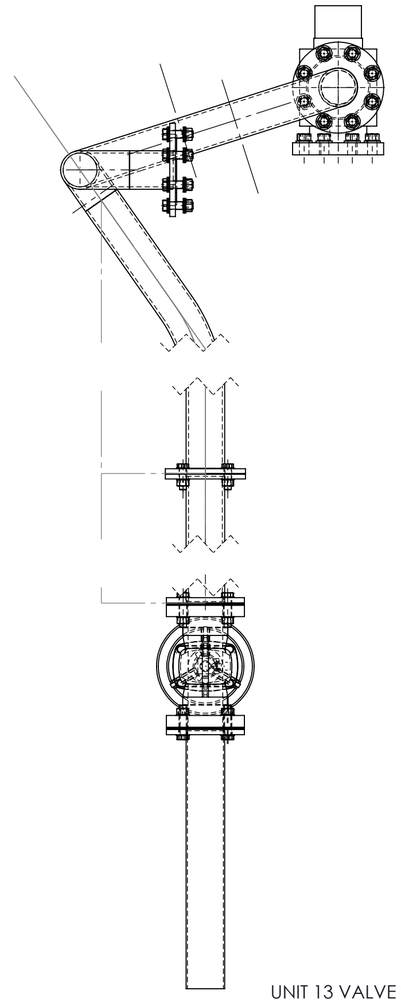

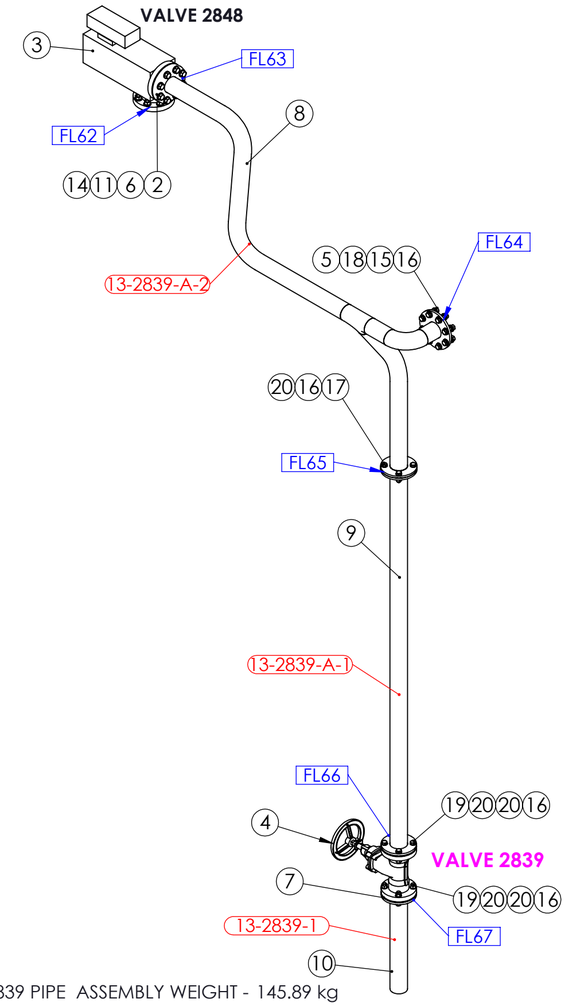

PIPEWORK MANUFACTURED OF A JIG - FLANGES AS PER DRAWING
DIMENSIONS ARE APPROXIMATE

UNIT 13 VALVE 2839 PIPE ASSEMBLY WEIGHT - 145.89 kg

REV	NAME & DATE	DESCRIPTION

UNLESS OTHERWISE SPECIFIED:
TOLERANCES: MACHINE + / - 0.25mm
FABRICATION + / - 1.0 mm

THIS DRG SUPPLIED BY
RODDY ENGINEERING
14 Waratah St, TUMUT NSW 2720
Ph: 02 6947 4039

DRAWING No. 3974-36 REV:

DRAWN N DE BRUYN 19/09/2025
DRAWING CHECKED
DESIGNED
DESIGN CHECKED
SCALE 1:10
WORK ORDER No
APPROVED
SECTION No/KKS
A2 SHEET SIZE

snowyhydro LIMITED

M2 POWER STATION UNIT 13
VALVE 2839 PIPE ASEMBLY

SMA-DRG-NO

REV

SHEET 1 OF 1