DIMENSIONS IN MILLIMETRES

ITEM	DRAWING No	DESCRIPTION	QTY.	MASS (kg)
1	OEM-32x25-RB-316	1 1/4" x 1" HEX REDUCING BUSH 316 S/S	3	
2	3976-20-40	OIL TANK END PLATE	1	0.23
3	3976-20-30	OIL TANK END PLATE	1	0.30
4	3976-20-25	OIL LEVEL TANK	1	2.02
5	3976-20-20	500NB FLANGE TO SUIT HV BUSHING	1	38.63
6	3976-20-15	450 NB SHED 10 PIPE END	1	17.97
7	3976-20-10	500NB SHED 10 304 S/S PIPE	1	97.24

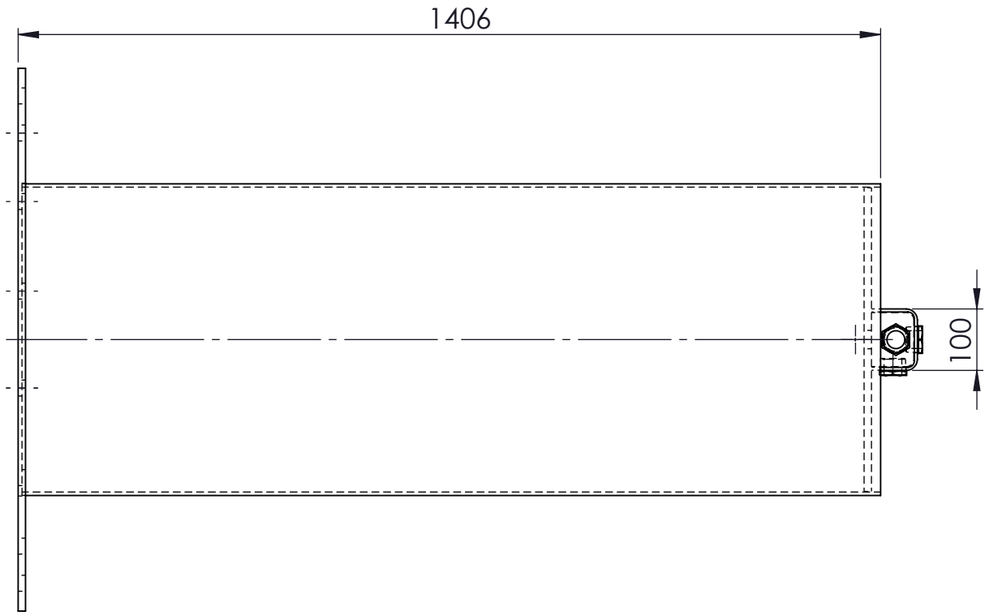

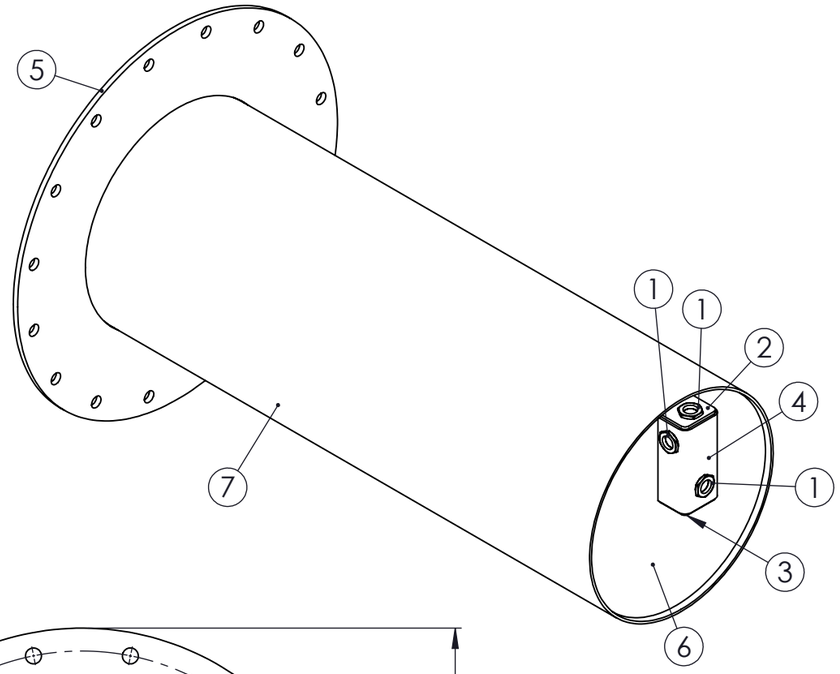

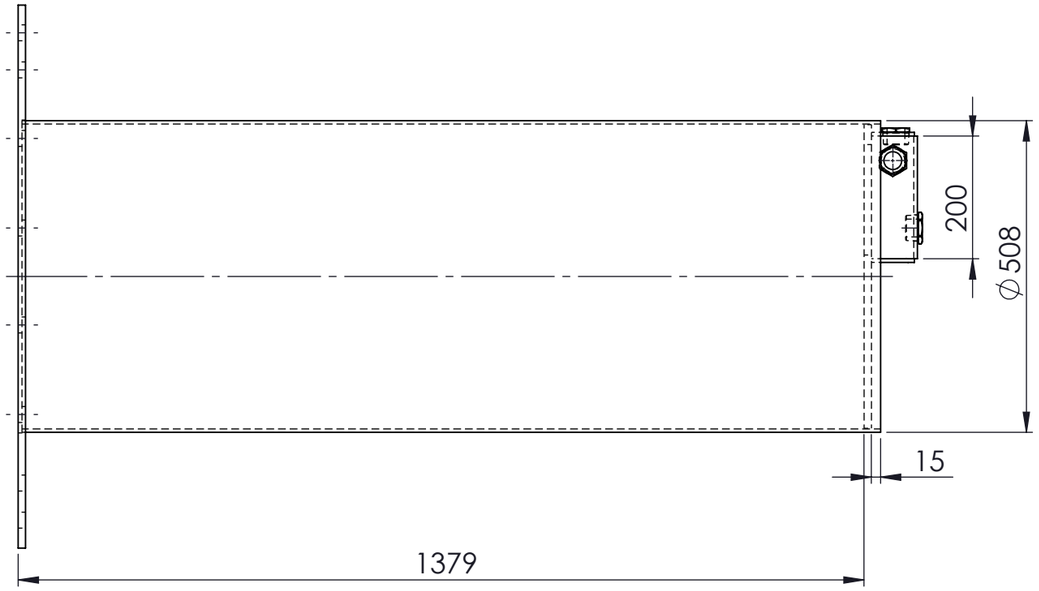

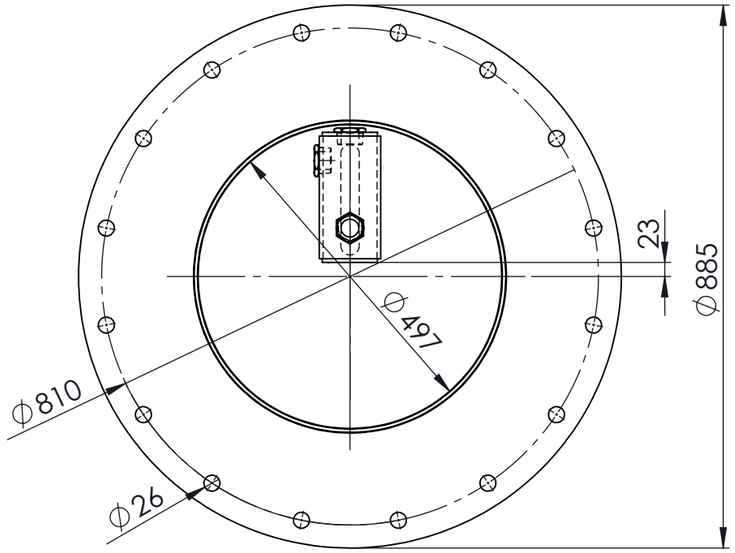

ALL WELDS - 5 CFW UNLESS NOTED OTHERWISE

HV BUSHING STORAGE CONTAINER WEIGHT - 156.91 kg

UNLESS OTHERWISE SPECIFIED: TOLERANCES: MACHINE + / - 0.25mm FABRICATION + / - 1.0 mm

DIMENSIONS IN MILLIMETRES

THIS DRAWING IS THE PROPERTY OF MECHANICAL ENGINEERING & CAD SERVICES (MECS) Pty Ltd & MUST NOT BE MANUFACTURED FROM,COPIED OR TRANSMITTED TO A THIRD PARTY WITHOUT THE PRIOR APPROVAL FROM MECHANICAL ENGINEERING & CAD SERVICES (MECS) Pty Ltd

MECS
Mechanical Engineering & CAD Services
11 Campbell Place WAGGA NSW 2650
Ph: - 0409 985 816
Email: nick@mecservices.com.au

THIRD ANGLE PROJECTION

CLIENT

RODDY ENGINEERING
14 Waratah St TUMUT NSW 2720
Ph: - 02 6947 4039
Email: roddyeng.com.au

TITLE: HV BUSHING STORAGE CONTAINER

DWG NO. 3976-20 | REV | A3

DRAWN N DE BRUYN | DATE 7/09/2025 | SCALE:1:10 | SHEET 1 OF 1