DIMENSIONS IN MILLIMETRES

ITEM	DRAWING No	DESCRIPTION	QTY.	MASS (kg)
1	3982-20-10	75x4 SHS POST	1	30.06
2	10-12	75 SHS BASE PLATE 2 HOLE	1	1.48
3	10-11	75 SHS CLEAT 2 HOLE	1	1.18
4	20-13	75 SHS BRACE CLEAT 2 HOLE	2	0.66

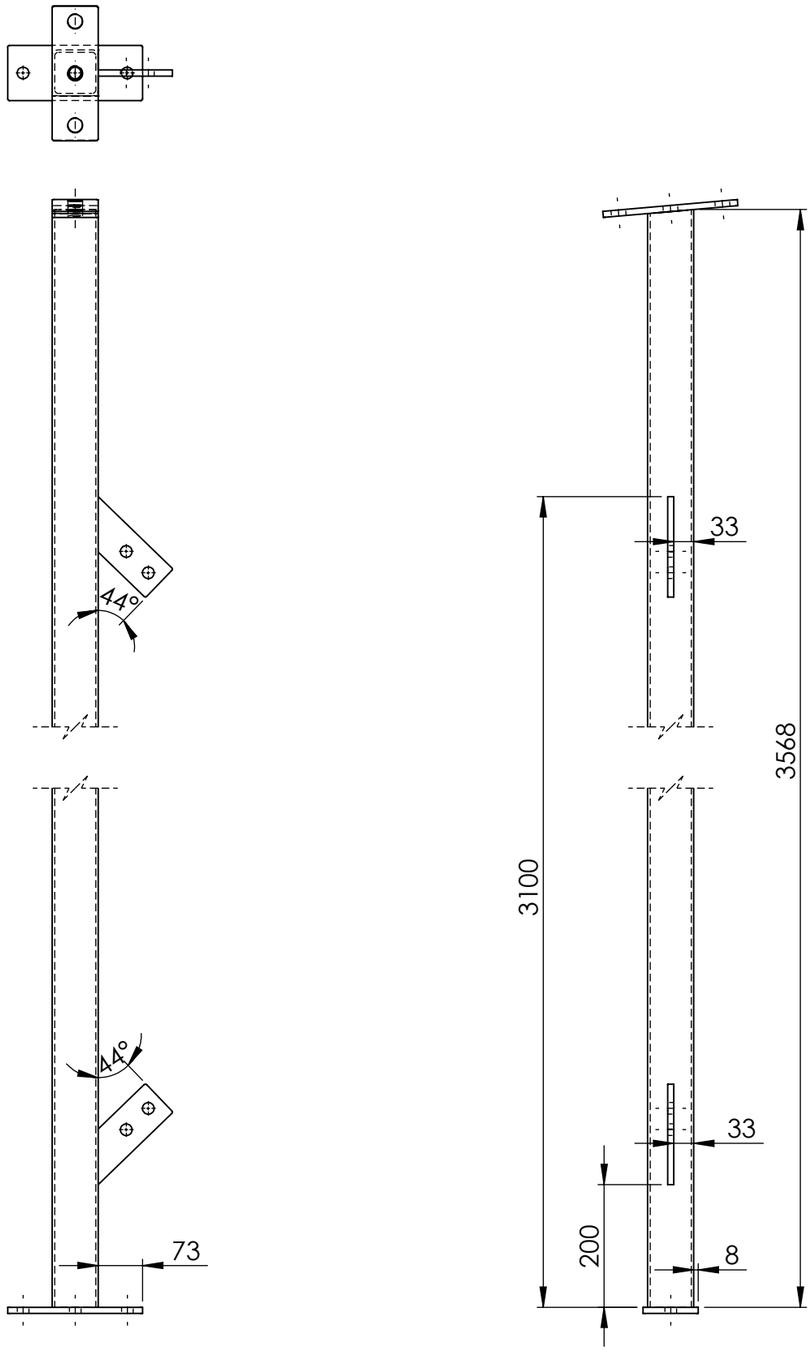

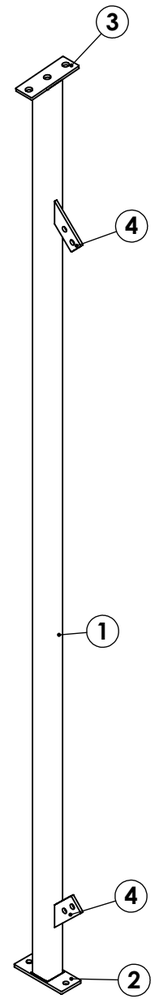

C2 - 75x4 SHS MID POST ASSY WEIGHT - 34.03 kg

ALL WELDS - 4CFW UNLESS NOTED OTHERWISE
FINISH - HOT DIPPED GALVANISED

UNLESS OTHERWISE SPECIFIED: TOLERANCES: MACHINE + / - 0.25mm FABRICATION + / - 1.0 mm

DIMENSIONS IN MILLIMETRES

THIS DRAWING IS THE PROPERTY OF MECHANICAL ENGINEERING & CAD SERVICES (MECS) Pty Ltd & MUST NOT BE MANUFACTURED FROM,COPIED OR TRANSMITTED TO A THIRD PARTY WITHOUT THE PRIOR APPROVAL FROM MECHANICAL ENGINEERING & CAD SERVICES (MECS) Pty Ltd

MECS
Mechanical Engineering & CAD Services
11 Campbell Place WAGGA NSW 2650
Ph: - 0409 985 816
Email: nick@mecservices.com.au

THIRD ANGLE PROJECTION

CLIENT
S & K BUILDING SOLUTIONS
Ph: - 0407 227 778
Email: Symon.Pyrohiw@bigpond.com

TITLE: C2 - 75x4 SHS MID POST ASSY

DWG NO. 3982-21 REV A3

DRAWN N DE BRUYN DATE 28/10/2025 SCALE:1:10 SHEET 1 OF 1