ITEM	DRAWING No	DESCRIPTION	QTY.	MASS (kg)
1	3982-38-10	12 DIAMETER CROSS BRACE ROD	1	3
2	20-14	ROD BRACE - CLEAT 2 HOLE	2	1

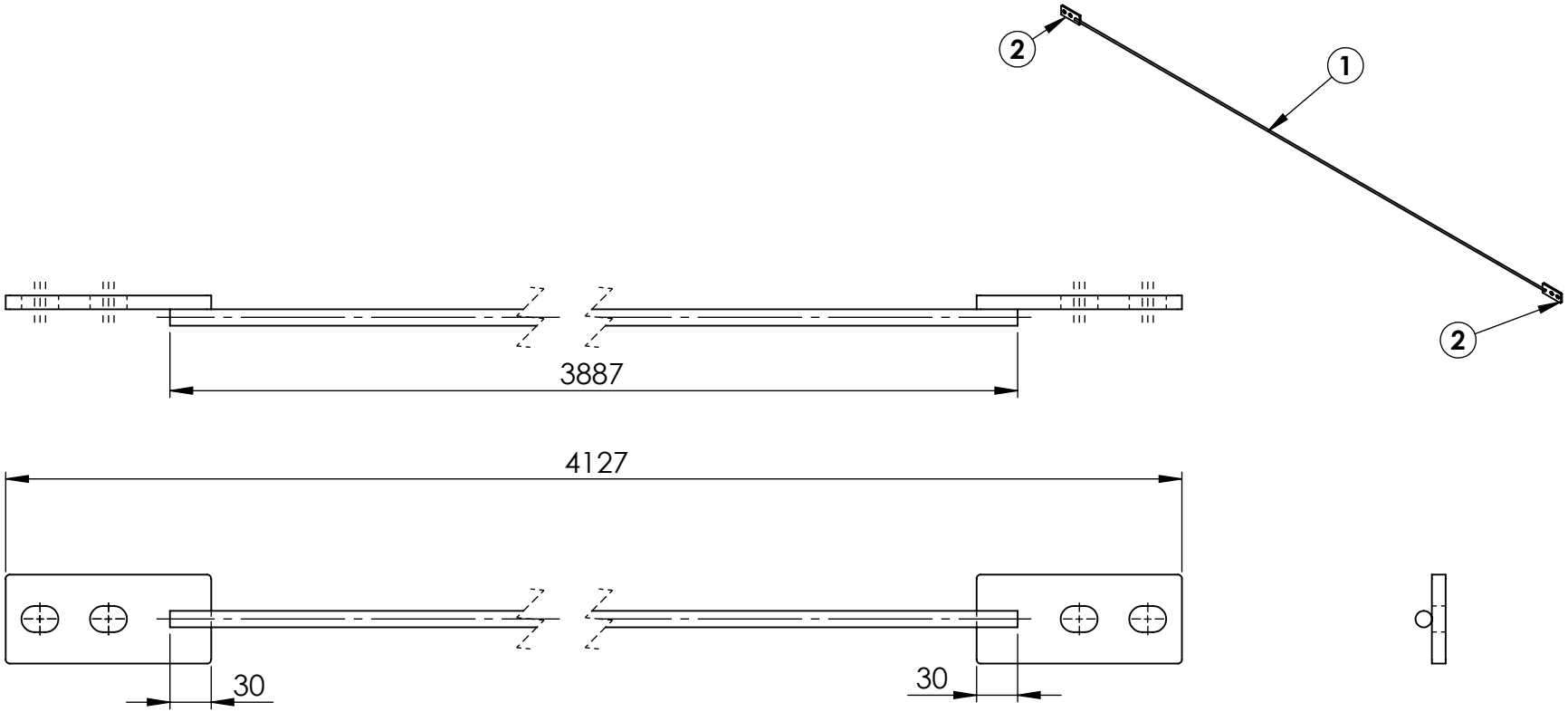

ALL WELDS - 4CFW UNLESS NOTED OTHERWISE
FINISH - HOT DIPPED GALVANISED

UNLESS OTHERWISE SPECIFIED: TOLERANCES: MACHINE + / - 0.25mm FABRICATION + / - 1.0 mm

DIMENSIONS IN MILLIMETRES

THIS DRAWING IS THE PROPERTY OF MECHANICAL ENGINEERING & CAD SERVICES (MECS) Pty Ltd & MUST NOT BE MANUFACTURED FROM,COPIED OR TRANSMITTED TO A THIRD PARTY WITHOUT THE PRIOR APPROVAL FROM MECHANICAL ENGINEERING & CAD SERVICES (MECS) Pty Ltd

MECS
Mechanical Engineering & CAD Services
11 Campbell Place WAGGA NSW 2650
Ph: - 0409 985 816
Email: nick@mecservices.com.au

THIRD ANGLE PROJECTION

WEIGHT: kg

CLIENT
S & K BUILDING SOLUTIONS
Ph: - 0407 227 778
Email: Symon.Pyrohiw@bigpond.com

TITLE:
CROSS BRACE ROOF SOUTH SIDE

DWG NO. 3982-38 | A4

DRAWN N DE BRUYN | DATE 29/01/2026 | SCALE:1:5 | SHEET 1 OF 1