DIMENSIONS IN MILLIMETRES

ITEM	DRAWING No	DESCRIPTION	QTY.	MASS (kg)
1	3982-40-10	230 PFC ROOF BEAM	1	191.18
2	40-10	100 PURLIN SINGLE CLEAT	9	0.5
3	30-12	8 THK 230 PFC WEB GUSSET	2	0.84
4	20-22	10 THK 230 PFC x 230 PFC CLEAT	1	1.56
5	20-23	75 SHS BRACE CLEAT 2 HOLE	2	1.03

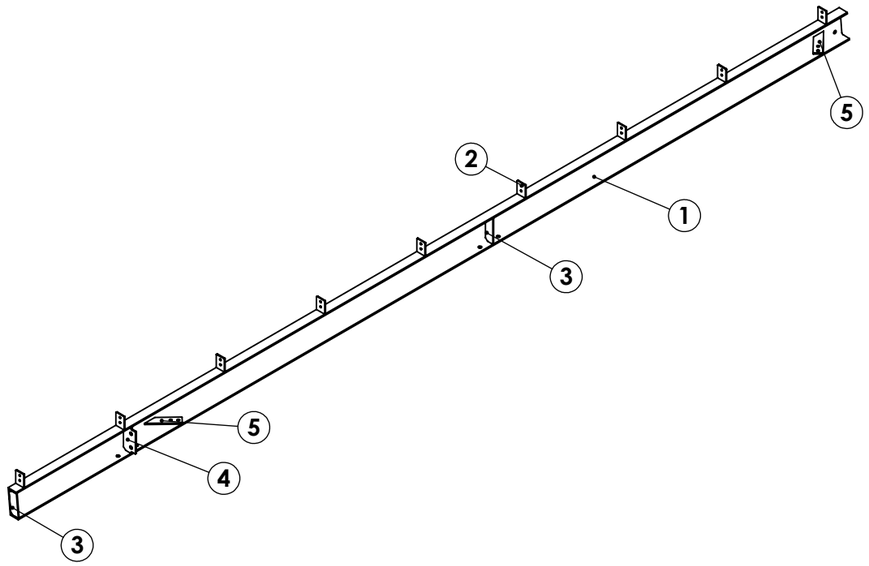

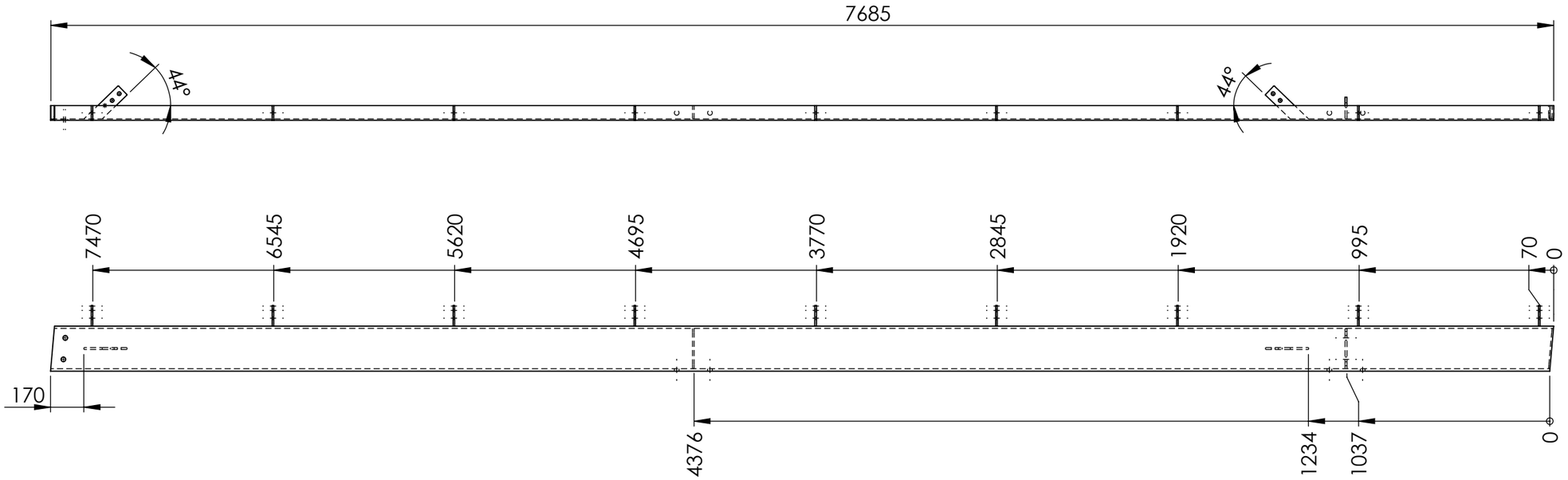

RB1-1 230 PFC ROOF BEAM WEIGHT - 200.73 kg

ALL WELDS - 6CFW UNLESS NOTED OTHERWISE
FINISH - HOT DIPPED GALVANISED

UNLESS OTHERWISE SPECIFIED: TOLERANCES: MACHINE + / - 0.25mm FABRICATION + / - 1.0 mm

DIMENSIONS IN MILLIMETRES

THIS DRAWING IS THE PROPERTY OF MECHANICAL ENGINEERING & CAD SERVICES (MECS) Pty Ltd & MUST NOT BE MANUFACTURED FROM,COPIED OR TRANSMITTED TO A THIRD PARTY WITHOUT THE PRIOR APPROVAL FROM MECHANICAL ENGINEERING & CAD SERVICES (MECS) Pty Ltd

MECS
Mechanical Engineering & CAD Services
11 Campbell Place WAGGA NSW 2650
Ph: - 0409 985 816
Email: nick@mecservices.com.au

THIRD ANGLE PROJECTION

CLIENT
S & K BUILDING SOLUTIONS
Ph: - 0407 227 778
Email: Symon.Pyrohiw@bigpond.com

TITLE: RB1-1 230 PFC ROOF BEAM

DWG NO. 3982-40 REV A3

DRAWN N DE BRUYN DATE 28/10/2025 SCALE:1:25 SHEET 1 OF 1