ITEM	DRAWING No	DESCRIPTION	QTY.	MASS (kg)
1	3982-42-10	230 PFC ROOF BEAM	1	191.26
2	40-10	100 PURLIN SINGLE CLEAT	9	0.5
3	30-12	8 THK 230 PFC WEB GUSSET	1	0.84
4	20-25	230x150 CLEAT 4 HOLE	1	2.60
5	20-24	300x120 CLEAT 4 HOLE	1	2.72
6	20-22	10 THK 230 PFC x 230 PFC CLEAT	1	1.56
7	20-16	170x110 CLEAT 2 HOLE	1	1.39

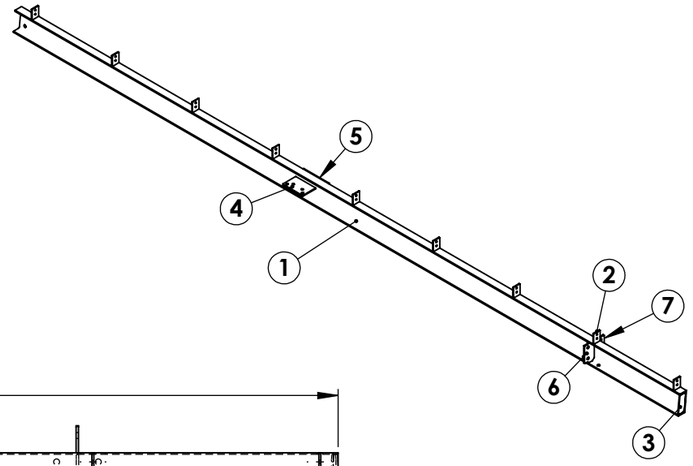

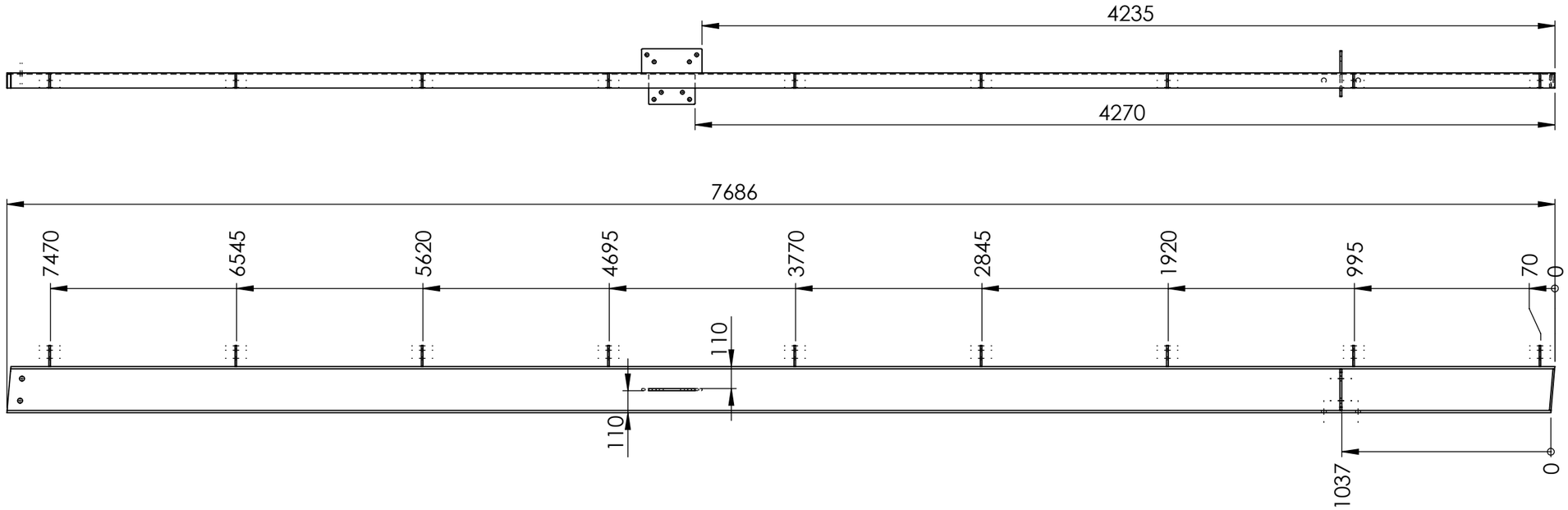

ALL WELDS - 6CFW UNLESS NOTED OTHERWISE
FINISH - HOT DIPPED GALVANISED

RB1-2 230 PFC ROOF BEAM WEIGHT - 204.62 kg

UNLESS OTHERWISE SPECIFIED: TOLERANCES: MACHINE + / - 0.25mm FABRICATION + / - 1.0 mm

THIS DRAWING IS THE PROPERTY OF MECHANICAL ENGINEERING & CAD SERVICES (MECS) Pty Ltd & MUST NOT BE MANUFACTURED FROM,COPIED OR TRANSMITTED TO A THIRD PARTY WITHOUT THE PRIOR APPROVAL FROM MECHANICAL ENGINEERING & CAD SERVICES (MECS) Pty Ltd

DIMENSIONS IN MILLIMETRES

THIRD ANGLE PROJECTION

MECS
Mechanical Engineering & CAD Services
11 Campbell Place WAGGA NSW 2650
Ph:- 0409 985 816
Email: nick@mecservices.com.au

TITLE: RB1-2 230 PFC ROOF BEAM

DWG NO. 3982-41 | REV | A3

DRAWN N DE BRUYN | DATE 28/10/2025 | SCALE 1:25 | SHEET 1 OF 1