DIMENSIONS IN MILLIMETRES

ITEM	DRAWING No	DESCRIPTION	QTY.	MASS (kg)
1	3982-43-10	230 PFC ROOF BEAM	1	149.25
2	30-12	8 THK 230 PFC WEB GUSSET	2	0.84
3	20-12	230 PFC CLEAT 2 HOLE	1	2.74
4	20-11	170x120 CLEAT 2 HOLE	1	1.55

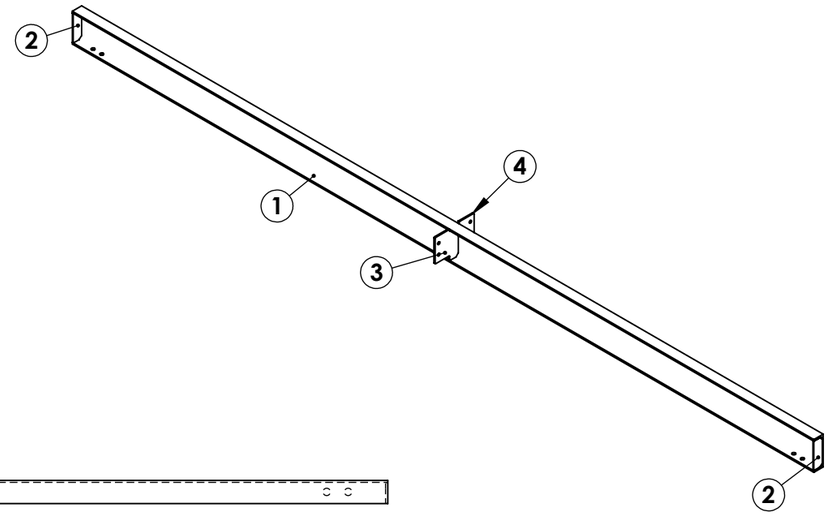

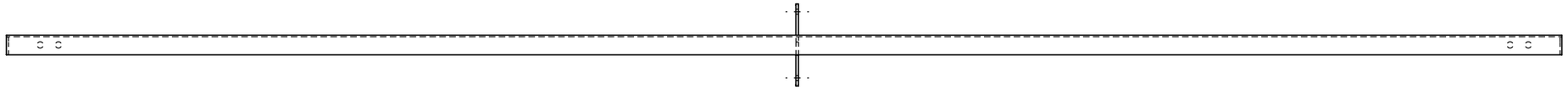

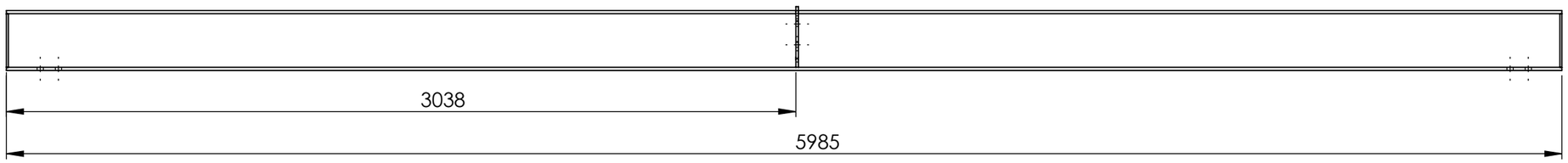

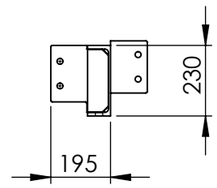

ALL WELDS - 6CFW UNLESS NOTED OTHERWISE
FINISH - ZINC RICH PRIMER

RB3-3 -230 PFC ROOF BEAM WEIGHT - 155.23 kg

UNLESS OTHERWISE SPECIFIED: TOLERANCES: MACHINE + / - 0.25mm FABRICATION + / - 1.0 mm

DIMENSIONS IN MILLIMETRES

THIS DRAWING IS THE PROPERTY OF MECHANICAL ENGINEERING & CAD SERVICES (MECS) Pty Ltd & MUST NOT BE MANUFACTURED FROM,COPIED OR TRANSMITTED TO A THIRD PARTY WITHOUT THE PRIOR APPROVAL FROM MECHANICAL ENGINEERING & CAD SERVICES (MECS) Pty Ltd

MECS
Mechanical Engineering & CAD Services
11 Campbell Place WAGGA NSW 2650
Ph: - 0409 985 816
Email: nick@mecservices.com.au

THIRD ANGLE PROJECTION

CLIENT
S & K BUILDING SOLUTIONS
Ph: - 0407 227 778
Email: Symon.Pyrohiw@bigpond.com

TITLE: RB3-3 -230 PFC ROOF BEAM

DWG NO. 3982-44 REV A3

DRAWN N DE BRUYN DATE 28/10/2025 SCALE:1:20 SHEET 1 OF 1