ITEM NO.	DESCRIPTION	LENGTH	MATERIAL	MASS (kg)
1	230 PFC	2915	BHP - 300 PLUS	72

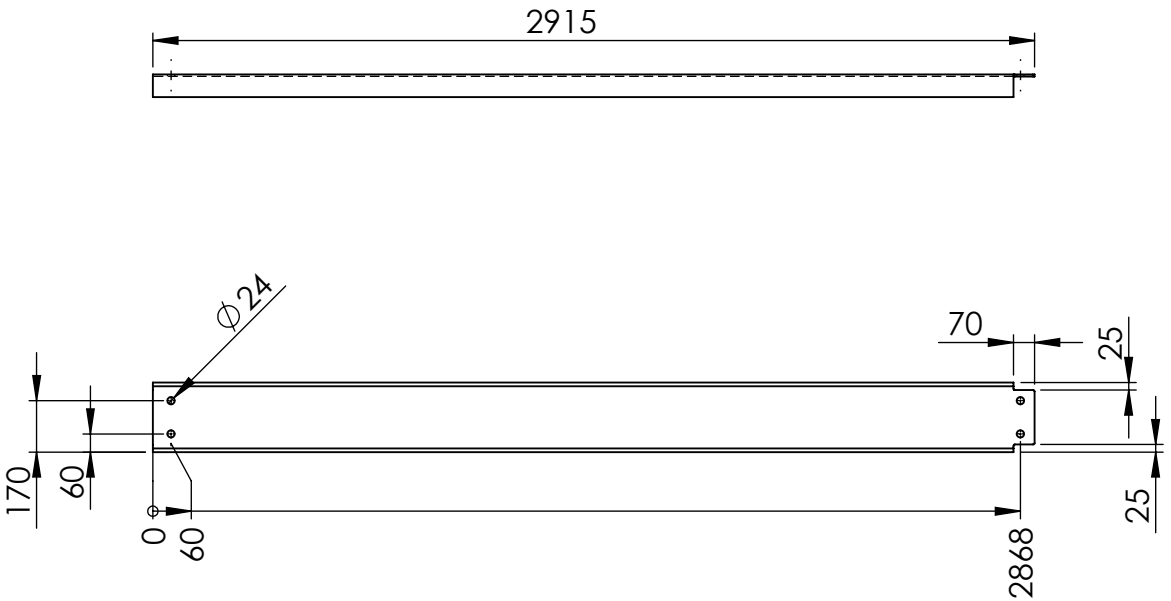

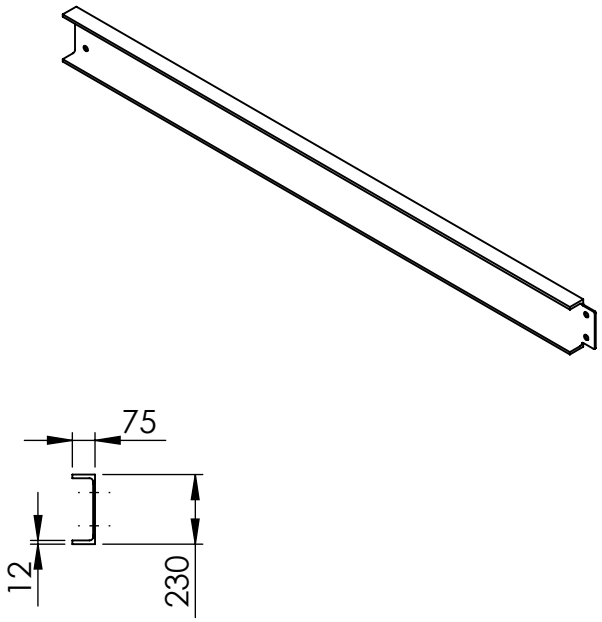

FINISH - HOT DIPPED GALVANISED

MATERIAL:- MILD STEEL

UNLESS OTHERWISE SPECIFIED: TOLERANCES: MACHINE + / - 0.25mm FABRICATION + / - 1.0 mm

DIMENSIONS IN MILLIMETRES

THIS DRAWING IS THE PROPERTY OF MECHANICAL ENGINEERING & CAD SERVICES (MECS) Pty Ltd & MUST NOT BE MANUFACTURED FROM,COPIED OR TRANSMITTED TO A THIRD PARTY WITHOUT THE PRIOR APPROVAL FROM MECHANICAL ENGINEERING & CAD SERVICES (MECS) Pty Ltd

MECS
Mechanical Engineering & CAD Services
11 Campbell Place WAGGA NSW 2650
Ph: - 0409 985 816
Email: nick@mecservices.com.au

THIRD ANGLE PROJECTION

WEIGHT: 72 kg

CLIENT
S & K BUILDING SOLUTIONS
Ph: - 0407 227 778
Email: Symon.Pyrohiw@bigpond.com

TITLE:
RB2-2 -230 PFC ROOF BEAM

DWG NO. 3982-48

A4

DRAWN N DE BRUYN DATE 22/11/2025 SCALE:1:25 SHEET 1 OF 1