DIMENSIONS IN MILLIMETRES

ITEM	DRAWING No	DESCRIPTION	QTY.	MASS (kg)
1	3985-20-11	75x6 EA TIE ANGLE FOR 150 PFC	1	9.51
2	3985-20-10	150PFC STAIRWAY TOP FRAME	1	104.27
3	3985-25-30	10 THK 150 PFC WEB GUSSET	2	0.68

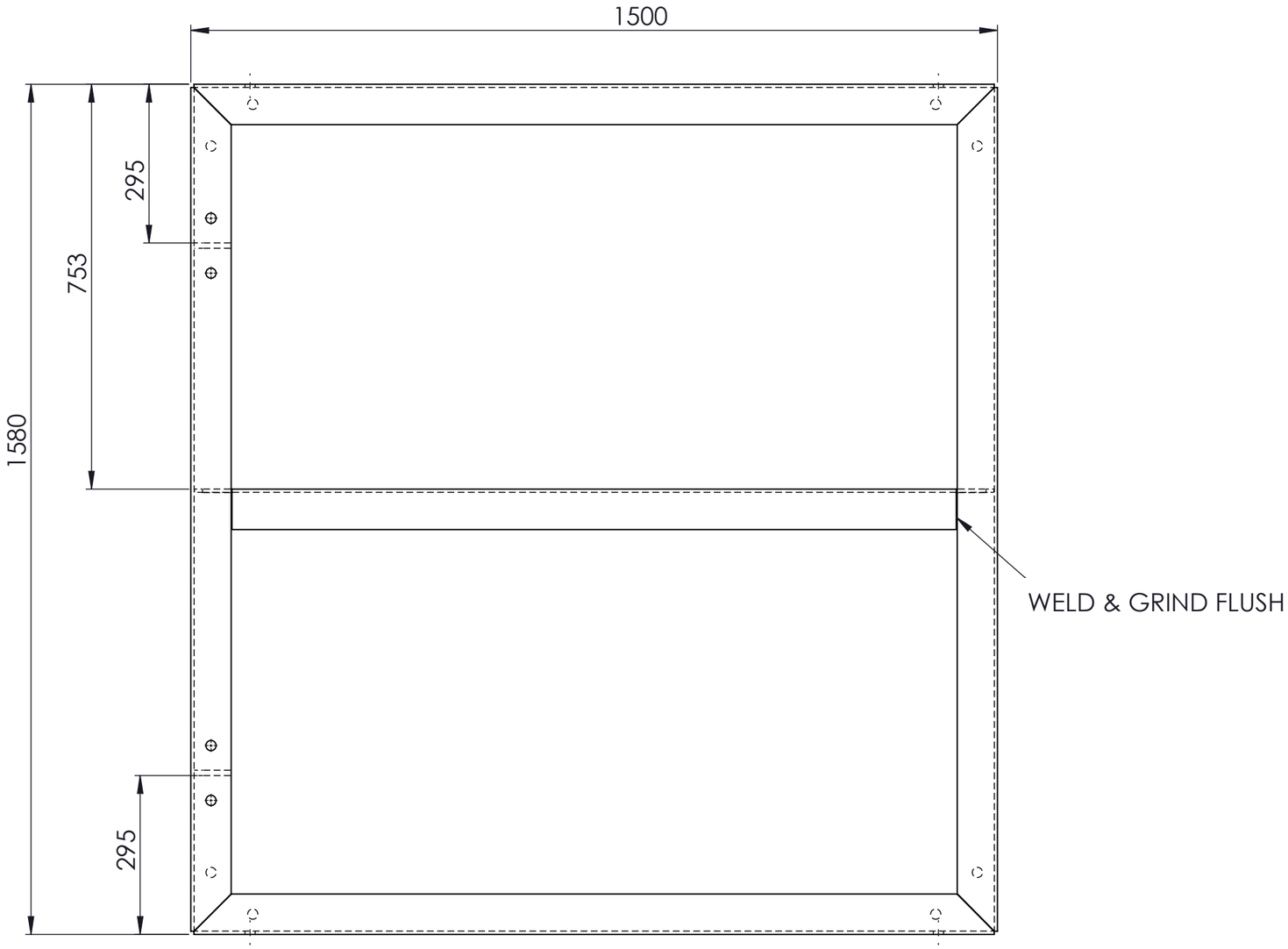

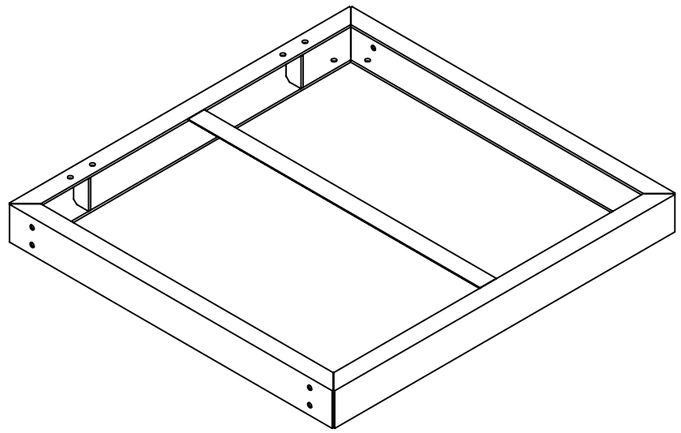

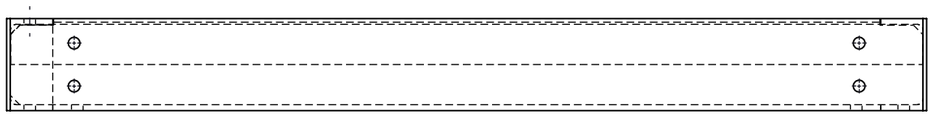

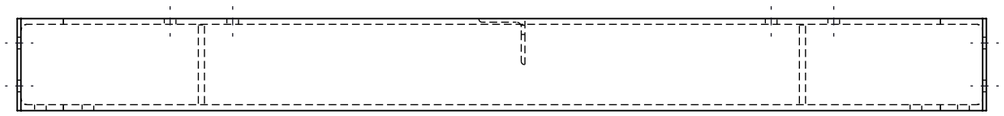

STAIR PLATFORM WEIGHT - 115.14 kg

UNLESS OTHERWISE SPECIFIED: TOLERANCES: MACHINE + / - 0.25mm FABRICATION + / - 1.0 mm

DIMENSIONS IN MILLIMETRES

THIS DRAWING IS THE PROPERTY OF MECHANICAL ENGINEERING & CAD SERVICES (MECS) Pty Ltd & MUST NOT BE MANUFACTURED FROM,COPIED OR TRANSMITTED TO A THIRD PARTY WITHOUT THE PRIOR APPROVAL FROM MECHANICAL ENGINEERING & CAD SERVICES (MECS) Pty Ltd

MECS
Mechanical Engineering & CAD Services
11 Campbell Place WAGGA NSW 2650
Ph: - 0409 985 816
Email: nick@mecservices.com.au

THIRD ANGLE PROJECTION

CLIENT

JR FABRICATION AND WELDING SERVICES
Ph: - 0412 372 364
Email: roddyjosh69@gmail.com

TITLE: STAIR PLATFORM

DWG NO. 3985-20 REV A3

DRAWN N DE BRUYN DATE 5/11/2025 SCALE:1:10 SHEET 1 OF 1