ITEM NO.	MATERIAL	MASS (kg)
1	MS PLATE GRADE 250	1

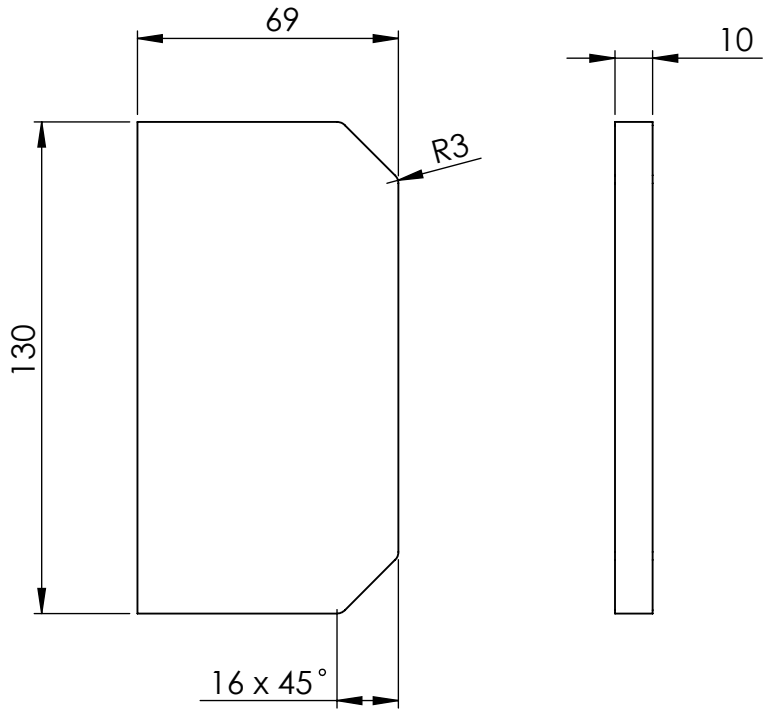

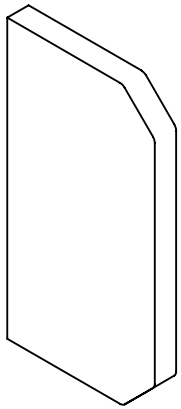

UNLESS OTHERWISE SPECIFIED: TOLERANCES: MACHINE + / - 0.25mm FABRICATION + / - 1.0 mm

DIMENSIONS IN MILLIMETRES

THIS DRAWING IS THE PROPERTY OF MECHANICAL ENGINEERING & CAD SERVICES (MECS) Pty Ltd & MUST NOT BE MANUFACTURED FROM,COPIED OR TRANSMITTED TO A THIRD PARTY WITHOUT THE PRIOR APPROVAL FROM MECHANICAL ENGINEERING & CAD SERVICES (MECS) Pty Ltd

MECS
Mechanical Engineering & CAD Services
11 Campbell Place WAGGA NSW 2650
Ph: - 0409 985 816
Email: nick@mecservices.com.au

THIRD ANGLE PROJECTION

WEIGHT: 1 kg

CLIENT

JR FABRICATION AND WELDING SERVICES

Ph: - 0412 372 364
Email: roddyjosh69@gmail.com

TITLE

10 THK 150 PFC WEB GUSSET

DWG NO.	REV	
3985-25-30		A4

DRAWN N DE BRUYN DATE 7/06/2022 SCALE:1:2 SHEET 1 OF 2