ITEM	DRAWING No	DESCRIPTION	QTY.	MASS (kg)
1	3985-25-10	150 PFC LH STYLE 830 RISE x 30 DEGREE	1	17
2	3985-25-20	150 PFC BASE PLATE	2	2
3	3985-25-30	10 THK 150 PFC WEB GUSSET	1	1

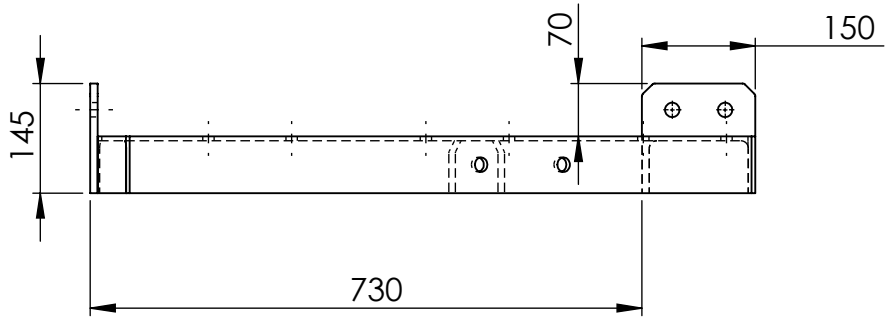

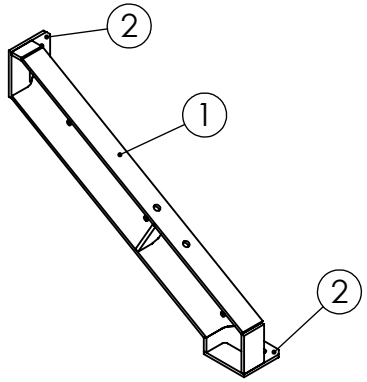

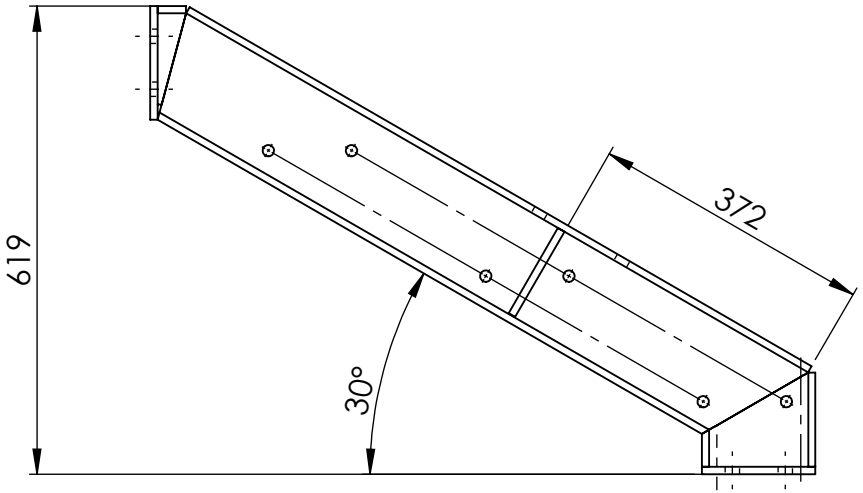

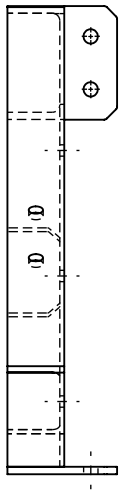

UNLESS OTHERWISE SPECIFIED: TOLERANCES: MACHINE + / - 0.25mm FABRICATION + / - 1.0 mm

DIMENSIONS IN MILLIMETRES

THIS DRAWING IS THE PROPERTY OF MECHANICAL ENGINEERING & CAD SERVICES (MECS) Pty Ltd & MUST NOT BE MANUFACTURED FROM,COPIED OR TRANSMITTED TO A THIRD PARTY WITHOUT THE PRIOR APPROVAL FROM MECHANICAL ENGINEERING & CAD SERVICES (MECS) Pty Ltd

MECS
Mechanical Engineering & CAD Services
11 Campbell Place WAGGA NSW 2650
Ph: - 0409 985 816
Email: nick@mecservices.com.au

THIRD ANGLE PROJECTION

WEIGHT: kg

CLIENT

JR FABRICATION AND WELDING SERVICES

Ph: - 0412 372 364
Email: roddyjosh69@gmail.com

TITLE 150 PFC LH STYLE x 830 RSIE x 30 DEGREE WELDMENT

DWG NO.	3985-25	REV	A4
DRAWN N DE BRUYN	DATE 23/01/2024	SCALE:1:10	SHEET 1 OF 1