DIMENSIONS IN MILLIMETRES

ITEM NO.	DESCRIPTION	LENGTH	QTY	MASS (kg)
1	150 PFC	37	1	0.33
2	150 PFC	950	1	15.66
3	150 PFC	124	1	1.50

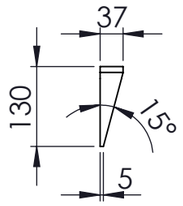

DETAIL PIECE 1

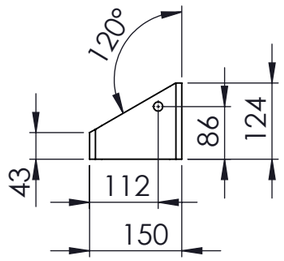

DETAIL PIECE 3

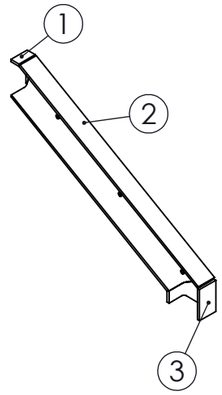

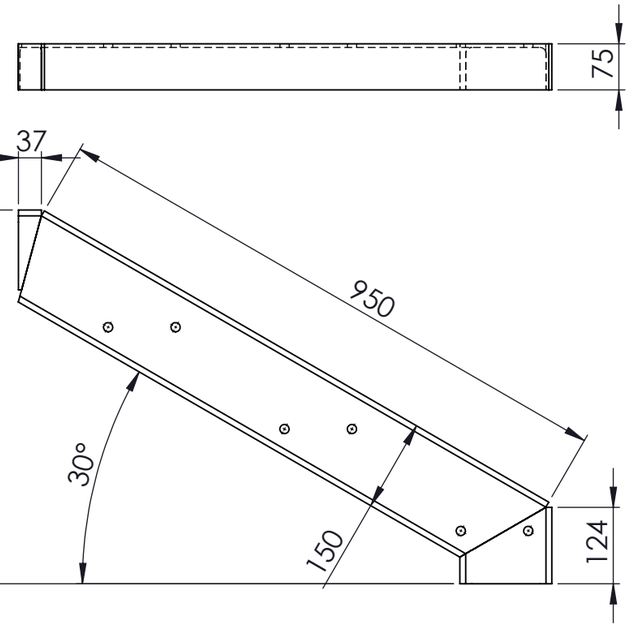

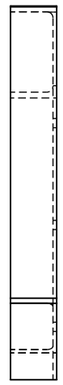

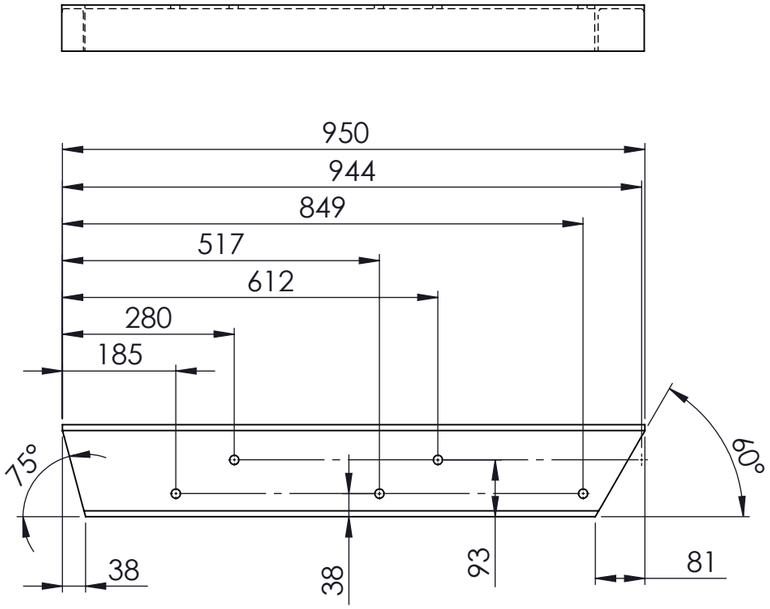

DETAIL PIECE

2

MATERIAL:- MILD STEEL

150 PFC LH STYLE 830 RISE x 25 DEGREE WEIGHT - 17.49 kg

UNLESS OTHERWISE SPECIFIED: TOLERANCES: MACHINE + / - 0.25mm FABRICATION + / - 1.0 mm

DIMENSIONS IN MILLIMETRES

THIS DRAWING IS THE PROPERTY OF MECHANICAL ENGINEERING & CAD SERVICES (MECS) Pty Ltd & MUST NOT BE MANUFACTURED FROM,COPIED OR TRANSMITTED TO A THIRD PARTY WITHOUT THE PRIOR APPROVAL FROM MECHANICAL ENGINEERING & CAD SERVICES (MECS) Pty Ltd

MECS
Mechanical Engineering & CAD Services
11 Campbell Place WAGGA NSW 2650
Ph: - 0409 985 816
Email: nick@mecservices.com.au

THIRD ANGLE PROJECTION

CLIENT

JR FABRICATION AND WELDING SERVICES
Ph: - 0412 372 364
Email: roddyjosh69@gmail.com

TITLE: 150 PFC LH STYLE 830 RISE x 25 DEGREE

DWG NO. 3985-26-10 REV A3

DRAWN N DE BRUYN DATE 8/11/2025 SCALE:1:10 SHEET 1 OF 1