ITEM	DRAWING No	DESCRIPTION	QTY.	MASS (kg)
1	OEM-P-N-MONO	MONOWILL STAUNCHION TYPE P	2	4.86
2	OEM-AM30-N	MONOWILL STAUNCHION TYPE AM 30 BLACK	2	4.58
3	OEM-30B-CLOSE-N	HANDRAIL ANGLE CLOSURE 30 DEGREE BOTTOM BLACK	2	
4	3985-30-10	PLATFORM HANDRAIL	1	16

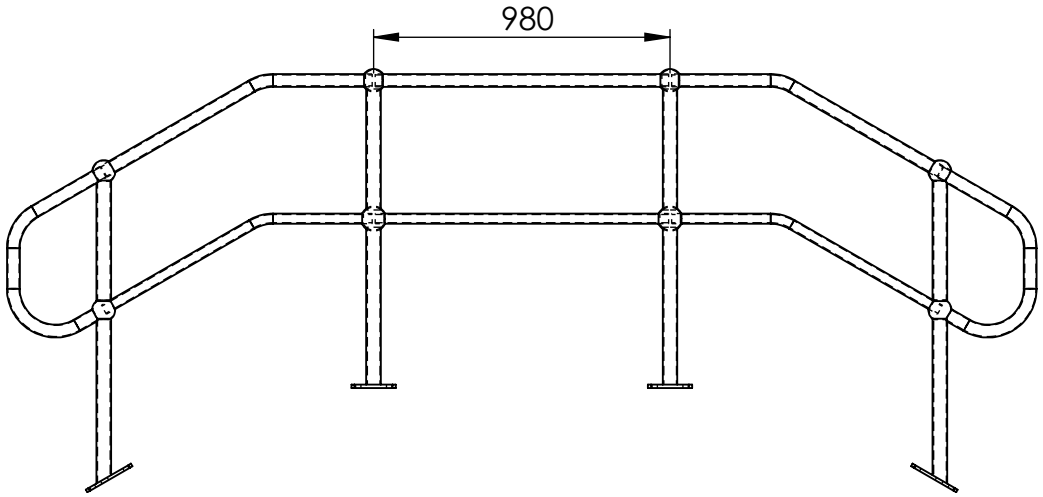

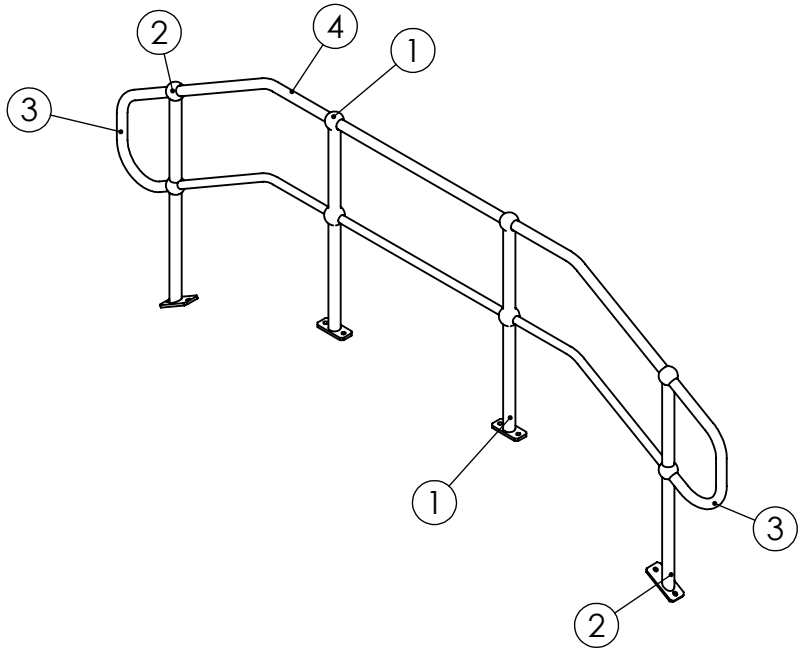

NOTE - DRILL 5 Ø HOLES IN TOP OF MOMOWILLS FOR HOT DIP GALVANISING

ALL WELDS - 4CFW UNLESS NOTED OTHERWISE
FINISH - HOT DIPPED GALVANISED

UNLESS OTHERWISE SPECIFIED: TOLERANCES: MACHINE + / - 0.25mm FABRICATION + / - 1.0 mm

DIMENSIONS IN MILLIMETRES

THIS DRAWING IS THE PROPERTY OF MECHANICAL ENGINEERING & CAD SERVICES (MECS) Pty Ltd & MUST NOT BE MANUFACTURED FROM,COPIED OR TRANSMITTED TO A THIRD PARTY WITHOUT THE PRIOR APPROVAL FROM MECHANICAL ENGINEERING & CAD SERVICES (MECS) Pty Ltd

MECS
Mechanical Engineering & CAD Services
11 Campbell Place WAGGA NSW 2650
Ph: - 0409 985 816
Email: nick@mecservices.com.au

THIRD ANGLE PROJECTION

WEIGHT: kg

CLIENT

JR FABRICATION AND WELDING SERVICES

Ph: - 0412 372 364
Email: roddyjosh69@gmail.com

TITLE

PLATFORM HANDRAIL

DWG NO.	REV	
3985-30		A4

DRAWN N DE BRUYN DATE 5/11/2025 SCALE:1:25 SHEET 1 OF 1