DIMENSIONS IN MILLIMETRES

ITEM	DRAWING No	DESCRIPTION	QTY.	MASS (kg)
1	3991-25	RETAINING WASHER	1	0
2	3991-15	TRUSS TOLLEY DRIVE WHEEL	1	14
3		3/8 UNC x 1 3/4" HEX BOLT ZP Gr 8	1	
4		M10 HIGH TENSILE FLAT WASHER ZINC PLATED (20x11x2)	1	

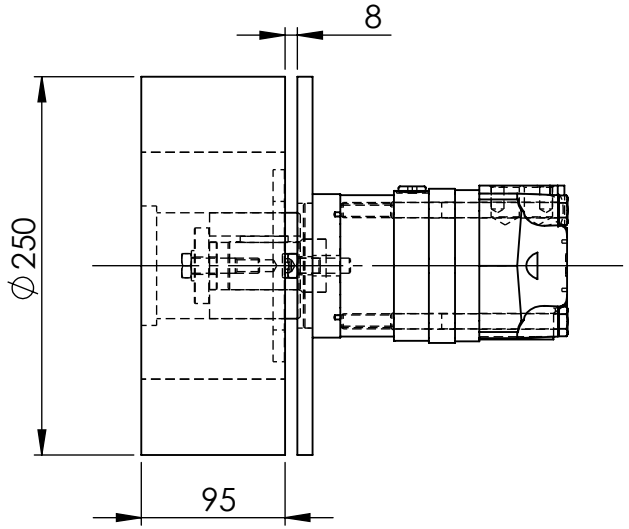

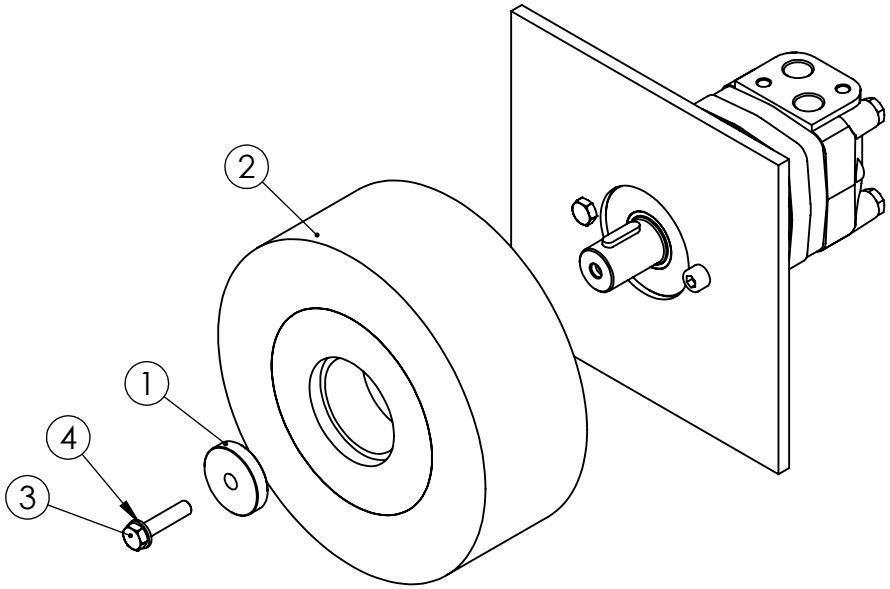

UNLESS OTHERWISE SPECIFIED: TOLERANCES: MACHINE + / - 0.25mm FABRICATION + / - 1.0 mm

THIS DRAWING IS THE PROPERTY OF MECHANICAL ENGINEERING & CAD SERVICES (MECS) Pty Ltd & MUST NOT BE MANUFACTURED FROM,COPIED OR TRANSMITTED TO A THIRD PARTY WITHOUT THE PRIOR APPROVAL FROM MECHANICAL ENGINEERING & CAD SERVICES (MECS) Pty Ltd

THIRD ANGLE PROJECTION

WEIGHT: 16 Kg

MECS
Mechanical Engineering & CAD Services
11 Campbell Place WAGGA NSW 2650
Ph: - 0409 985 816
Email: nick@mecservices.com.au

TITLE:

TRUSS TROLLEY WHEEL ASSEMBLY

DWG NO. 3991-10 REV A4

DRAWN N DE BRUYN DATE 31/12/2025 SCALE:1:5 SHEET 1 OF 1