DIMENSIONS IN MILLIMETRES

ITEM NO.	QTY.	DESCRIPTION	LENGTH
1	1	35 DIA 1020 BMS	19

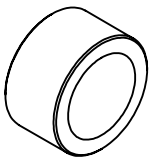

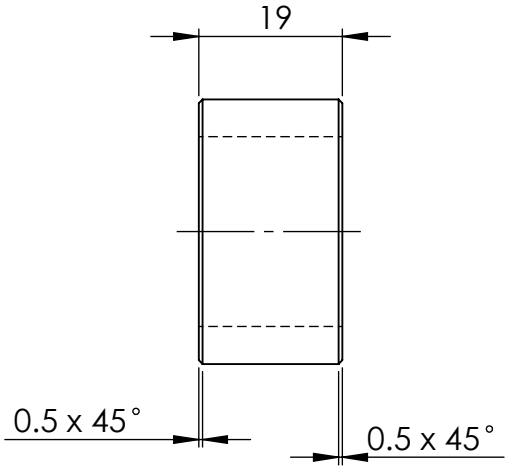

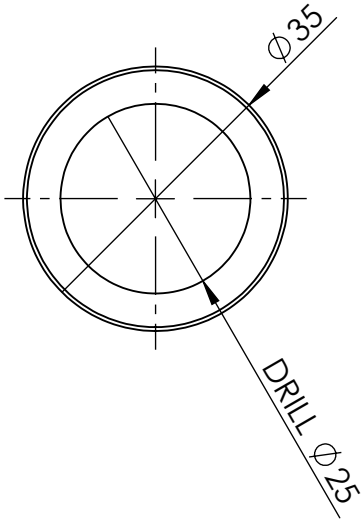

MATERIAL:- 1020 BMS

UNLESS OTHERWISE SPECIFIED: TOLERANCES: MACHINE + / - 0.25mm FABRICATION + / - 1.0 mm

THIS DRAWING IS THE PROPERTY OF MECHANICAL ENGINEERING & CAD SERVICES (MECS) Pty Ltd & MUST NOT BE MANUFACTURED FROM,COPIED OR TRANSMITTED TO A THIRD PARTY WITHOUT THE PRIOR APPROVAL FROM MECHANICAL ENGINEERING & CAD SERVICES (MECS) Pty Ltd

THIRD ANGLE PROJECTION

WEIGHT: 0 Kg

MECS
Mechanical Engineering & CAD Services
11 Campbell Place WAGGA NSW 2650
Ph: - 0409 985 816
Email: nick@mecservices.com.au

TITLE: 35 BMS - SPACER 25 DIA HOLE 19 LONG

DWG NO. 3991-35 REV

A4

DRAWN N DE BRUYN DATE 28/01/2026 SCALE:1:1 SHEET 1 OF 1