ITEM	DRAWING No	DESCRIPTION	QTY.	MASS (kg)
1	OEM-80-LR-40-316L	80NB LONG RADIUS BEND SHED 40 316L S/S	1	2.06
2	OEM-80NB-T-40-316L	80NB BUTT WELD TEE SHED 40 316L S/S	1	2.18
3	OEM-80NB-PN10-SO-316L	80NB PN10 EN1092 SLIP ON FLANGE 316L S/S	2	3.42
4	3996-25-11	150 OD x 108 PCD 316L S/S FLANGE	1	2.92
5	3996-25-10	80Nb SHED 40 316L S/S PIPE	1	5.31

RED EYE QR CODE AREA

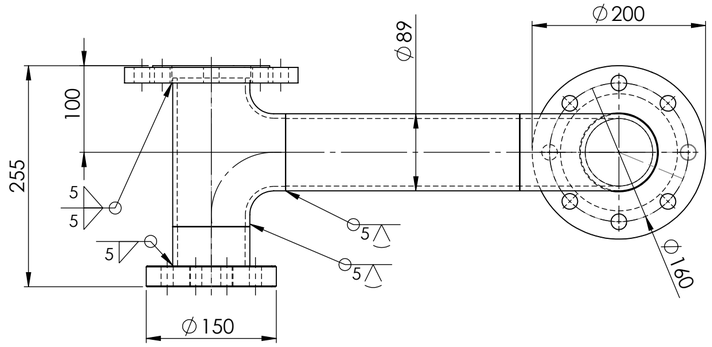

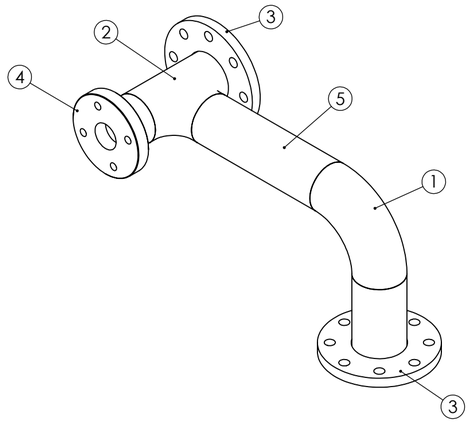

NOT FOR MANUFACTURE

DIMENSIONS REQUIRE CONFIRMING BEFORE WORKSHOP DRAWINGS CAN DONE

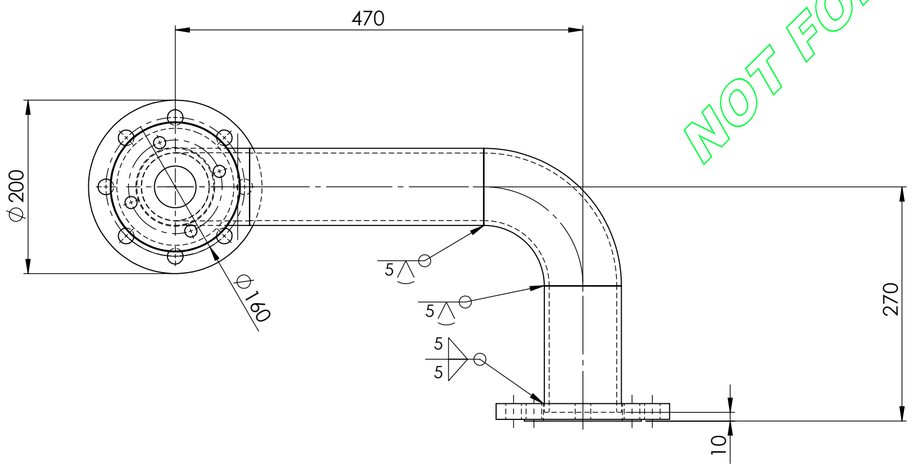

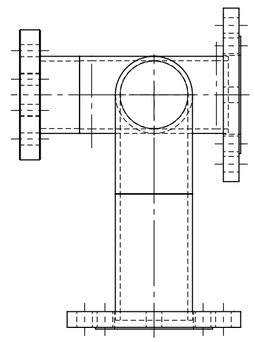

PIPEWORK MANUFACTURED OF A JIG - FLANGES AS PER DRAWING
DIMENSIONS ARE APPROXIMATE

EMEBEDED PIPE ITEM 2 WEIGHT - 19.32 kg

REV	NAME & DATE	DESCRIPTION

UNLESS OTHERWISE SPECIFIED:
TOLERANCES: MACHINE + / - 0.25mm
FABRICATION + / - 1.0 mm

THIS DRG SUPPLIED BY
RODDY ENGINEERING
14 Waratah St, TUMUT NSW 2720
Ph: 02 6947 4039

DRAWING No. 3996-25
REV:

DRAWN N DE BRUYN 27/02/2026
DRAWING CHECKED
DESIGNED
DESIGN CHECKED
SCALE 1:5
APPROVED
WORK ORDER No
SECTION No/KKS
A2 SHEET SIZE

snowyhydro LIMITED

M2 POER STATION UNIT 13
COOLING WATER HEAT EXCHANGER
EMEBEDED PIPE ITEM 2

SMA-DRG-NO

REV

SHEET 1 OF 1

0,0