ITEM	DRAWING No	DESCRIPTION	QTY.	MASS (kg)
1	OEM-80NBx40-T-40-316L	80NB x 40NB BUTT WELD REDUCING TEE 316L S/S	1	2.31
2	OEM-80NB-PN10-SO-316L	80NB PN10 EN1092 SLIP ON FLANGE 316L S/S	2	3.42
3	OEM-40-150-SO-316L	40NB FLANGE ANSI 150 LB SLIP ON 316L S/S	1	1.3
4	3996-30-10	80NB & 40NB PIPE SHED 40 316L S/S	1	2.97

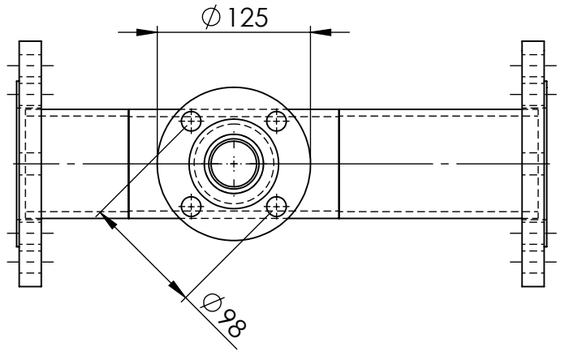

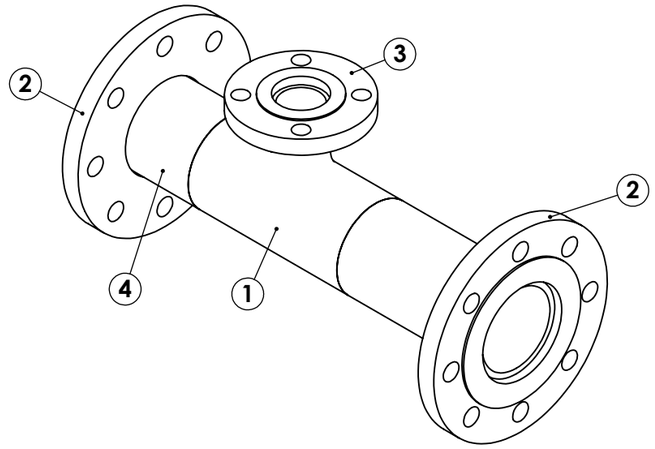

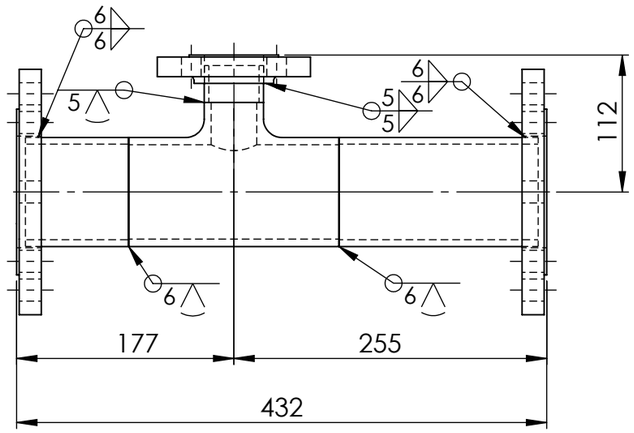

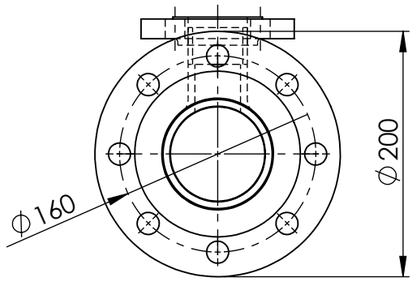

PIPEWORK MANUFACTURED OF A JIG - FLANGES AS PER DRAWING
DIMENSIONS ARE APPROXIMATE

COOLING WATER PIPE TEE WEIGHT: 13.44 kg

			UNLESS OTHERWISE SPECIFIED: TOLERANCES: MACHINE + / - 0.25mm FABRICATION + / - 1.0 mm	DRAWN N DE BRUYN 27/02/2026	DRAWING CHECKED
			THIS DRG SUPPLIED BY RODDY ENGINEERING 14 Waratah St, TUMUT NSW 2720 Ph: 02 6947 4039	DESIGNED	DESIGN CHECKED
				SCALE 1:5 WORK ORDER No	APPROVED
REV	NAME & DATE	DESCRIPTION	DRAWING No. 3996-30	REV:	SECTION No/KKS

snowyhydro LIMITED

M2 POWER STATION UNIT 13
COOLING WATER HEAT EXCHANGER
COOLING WATER PIPE TEE

A3 SHEET SIZE

SMA-DRG-NO

REV

SHEET 1 OF 1

0,0