ITEM NO.	DESCRIPTION	LENGTH	QTY	MASS (kg)
1	89x5.5 CHS	104	1	1
2	89x5.5 CHS	236	1	3
3	89x5.5 CHS	212	1	2
4	89x5.5 CHS	55	1	1

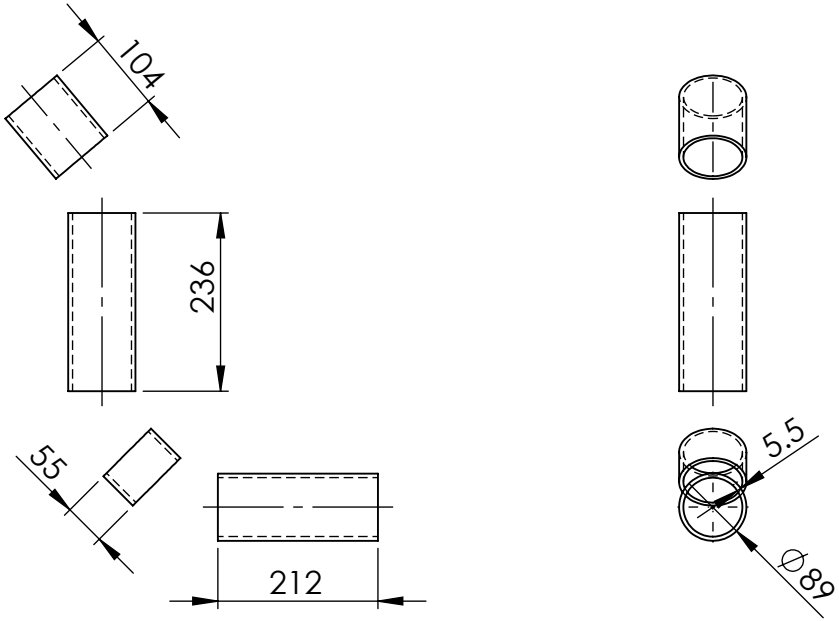

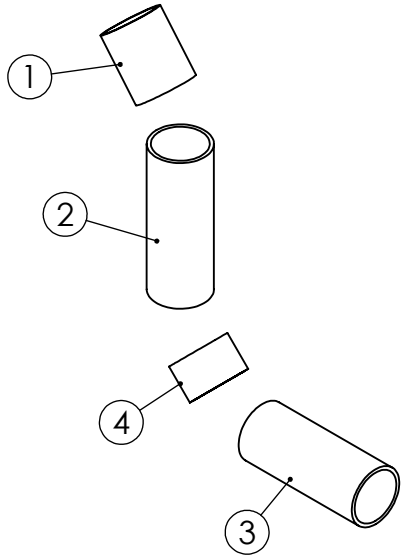

MATERIAL:- 316L STAINLESS STEEL

UNLESS OTHERWISE SPECIFIED: TOLERANCES: MACHINE + / - 0.25mm FABRICATION + / - 1.0 mm

DIMENSIONS IN MILLIMETRES

THIS DRAWING IS THE PROPERTY OF MECHANICAL ENGINEERING & CAD SERVICES (MECS) Pty Ltd & MUST NOT BE MANUFACTURED FROM,COPIED OR TRANSMITTED TO A THIRD PARTY WITHOUT THE PRIOR APPROVAL FROM MECHANICAL ENGINEERING & CAD SERVICES (MECS) Pty Ltd

MECS
Mechanical Engineering & CAD Services
11 Campbell Place WAGGA NSW 2650
Ph: - 0409 985 816
Email: nick@mecservices.com.au

THIRD ANGLE PROJECTION

WEIGHT: 7 kg

CLIENT

RODDY ENGINEERING
14 Waratah St TUMUT NSW 2720
Ph: - 02 6947 4039
Email: roddyeng.com.au

TITLE:

80MNB SHED 40 316L S/S PIPE

DWG NO. 3996-35-10

A4

DRAWN N DE BRUYN DATE 27/02/2026 SCALE:1:10 SHEET 1 OF 1