ITEM	DRAWING No	DESCRIPTION	QTY.	MASS (kg)
1	OEM-80x40-LR-40-316L	80NB LONG RADIUS BEND TRIMMED TO 40 DEGREES SHED 40 316L S/S	1	0.92
2	OEM-80NB-PN10-SO-316L	80NB PN10 EN1092 SLIP ON FLANGE 316L S/S	2	3.42
3	3996-35-10	80MNB SHED 40 316L S/S PIPE	1	6.99
4	OEM-80x45-SR-40-316L	80NB SHORT RADIUS BEND x 45 DEGREE 316L S/S SHED 40	2	1.04

RED EYE QR CODE AREA

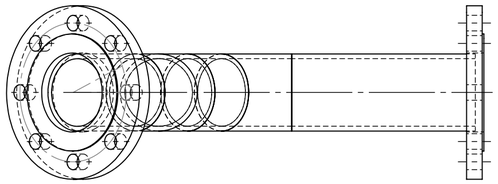

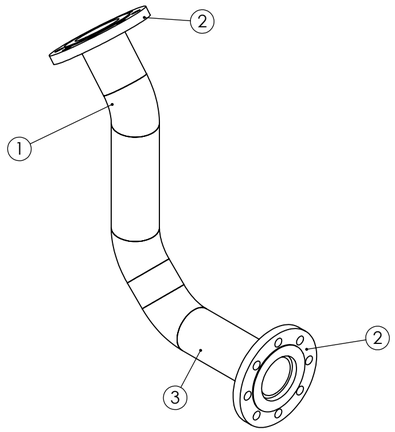

NOT FOR MANUFACTURE

DIMENSIONS REQUIRE CONFIRMING BEFORE WORKSHOP DRAWINGS CAN DONE

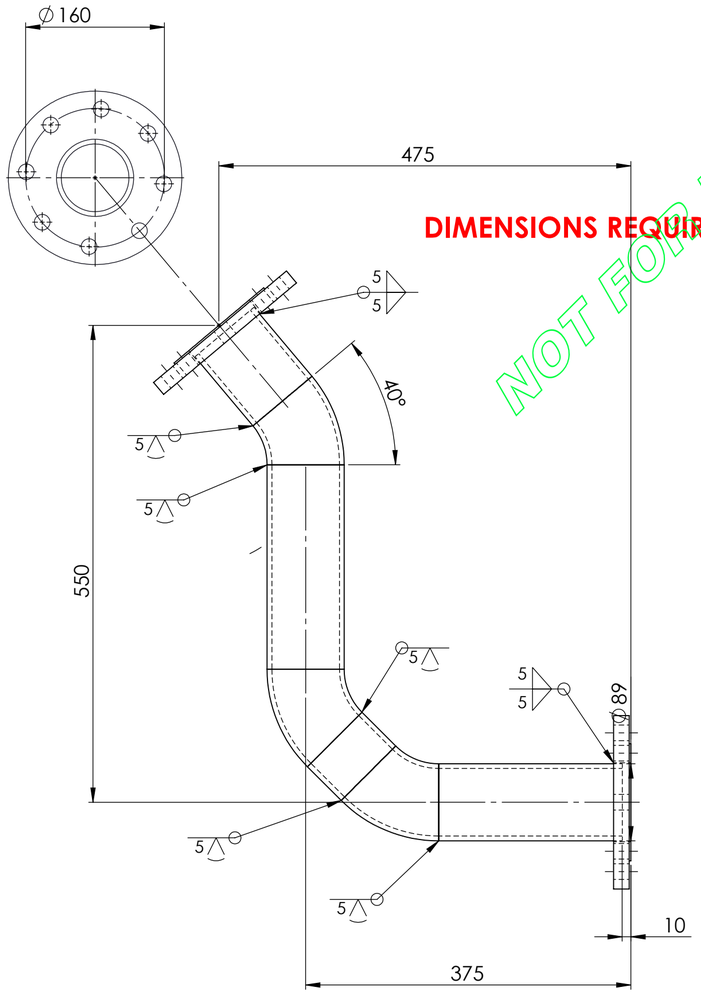

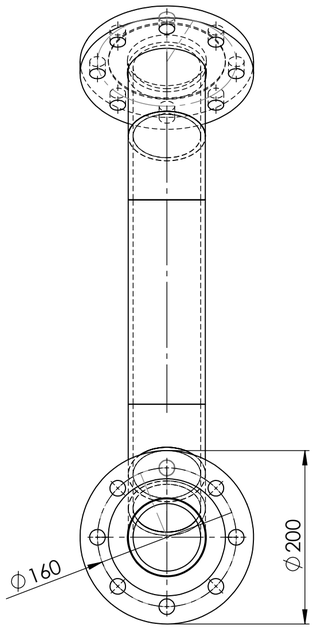

EMBEDED PIPE ELBOW ITEM 1 WEIGHT - 16.82 kg

PIPEWORK MANUFACTURED OF A JIG - FLANGES AS PER DRAWING
DIMENSIONS ARE APPROXIMATE

REV	NAME & DATE	DESCRIPTION

UNLESS OTHERWISE SPECIFIED:
TOLERANCES: MACHINE + / - 0.25mm
FABRICATION + / - 1.0 mm

THIS DRG SUPPLIED BY
RODDY ENGINEERING
14 Waratah St, TUMUT NSW 2720
Ph: 02 6947 4039

DRAWING No. 3996-35
REV:

DRAWN N DE BRUYN 27/02/2026
DRAWING CHECKED
DESIGNED
DESIGN CHECKED
SCALE 1:5
WORK ORDER No
APPROVED
SECTION No/KKS
A2 SHEET SIZE

snowyhydro LIMITED

M2 POWER STATION UNIT 13
COOLING WATER HEAT EXCHANGER
EMBEDED PIPE ELBOW ITEM 1

SMA-DRG-NO

REV

SHEET 1 OF 1