ITEM	DRAWING No	DESCRIPTION	QTY.	MASS (kg)
1	OEM-80-LR-40-316L	80NB LONG RADIUS BEND SHED 40 316L S/S	1	2.06
2	OEM-80x50-T-40-316L	80NB x 50NB BUTT WELD REDUCING TEE SHED 40 316L S/S	3	2.36
3	OEM-80NB-PN10-SO-316L	80NB PN10 EN1092 SLIP ON FLANGE 316L S/S	1	3.42
4	OEM-80-40-316-C	80NB BUTTWELD CAP SHED 40 316L S/S	1	0.72
5	OEM-50-150-SO-316L	50NB ANSI 150 Lb SLIP ON FLANGE 316L S/S	3	2.16
6	OEM-1_2-BSPP-3000-316L	1/2 BSPP 3000 Lb HALF COUPLING 316L S/S	2	0.06
7	3996-40-25	20NB 316S/S SHED 40 PIPE	1	0.02
8	3996-40-20	20NB THREADED & BENT PIPE 316L S/S SHED 40	1	0.51
9	3996-40-10	PIPE SEGEMENT 1 -	1	23.20

RED EYE QR CODE AREA

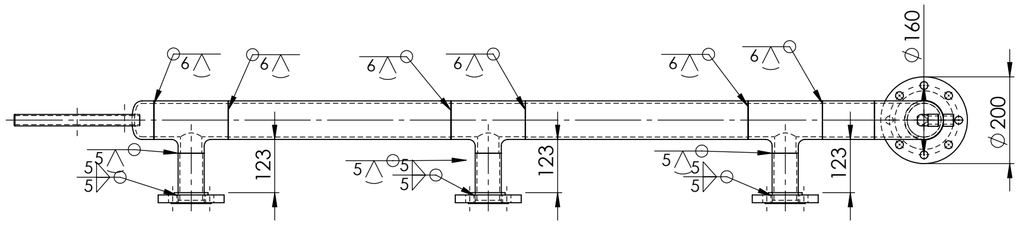

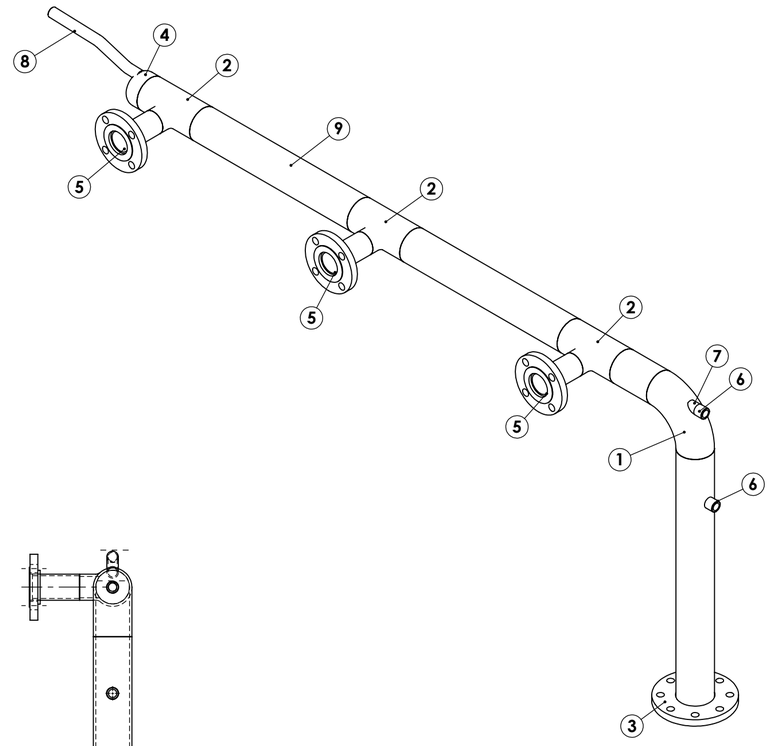

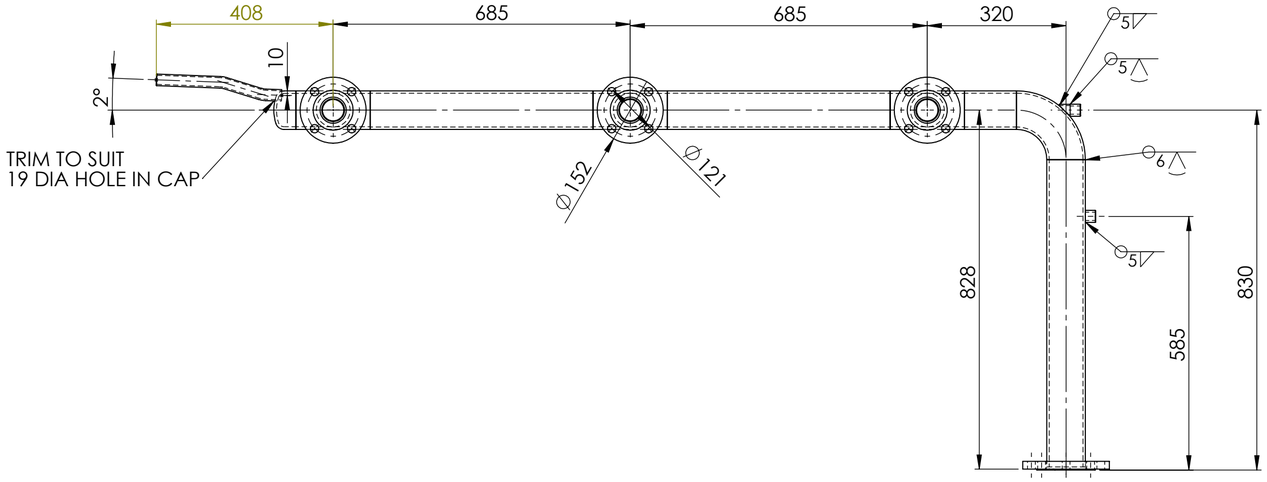

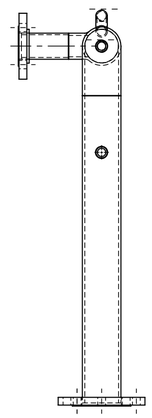

PIPEWORK MANUFACTURED OF A JIG - FLANGES AS PER DRAWING
DIMENSIONS ARE APPROXIMATE

COOLING WATER PIPE 1 WEIGHT - 43.60 kg

ALL WELDS - 5 CFW UNLESS NOTED OTHERWISE

REV	NAME & DATE	DESCRIPTION

UNLESS OTHERWISE SPECIFIED:
TOLERANCES: MACHINE + / - 0.25mm
FABRICATION + / - 1.0 mm

THIS DRG SUPPLIED BY
RODDY ENGINEERING
14 Waratah St, TUMUT NSW 2720
Ph: 02 6947 4039

DRAWING No. 3996-40
REV:

DRAWN N DE BRUYN 2/03/2026
DRAWING CHECKED
DESIGNED
DESIGN CHECKED
SCALE 1:10
WORK ORDER No
APPROVED
SECTION No/KKS
A2 SHEET SIZE

snowyhydro LIMITED

M2 POWER STATION UNIT 13
GENERATOR COOLING WATER
COOLING WATER PIPE 1

SMA-DRG-NO

REV

SHEET 1 OF 1